WHEELIE BINS

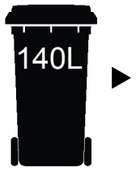

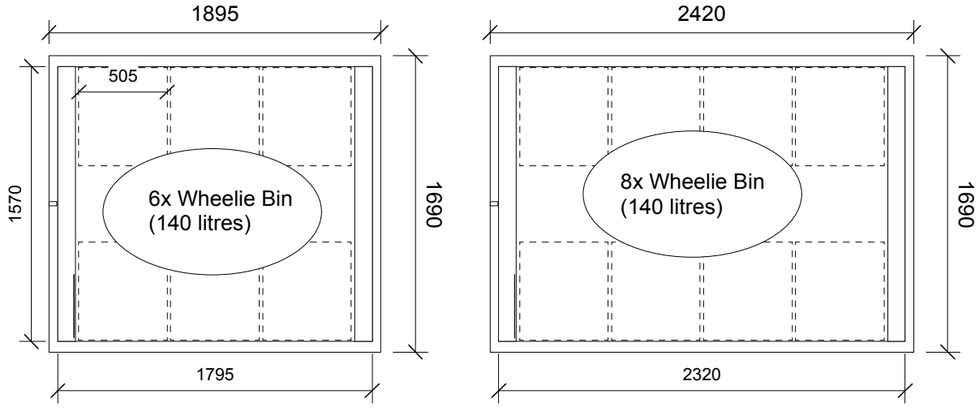

1890 High



WHEELIE BINS

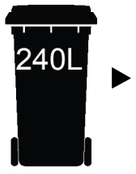

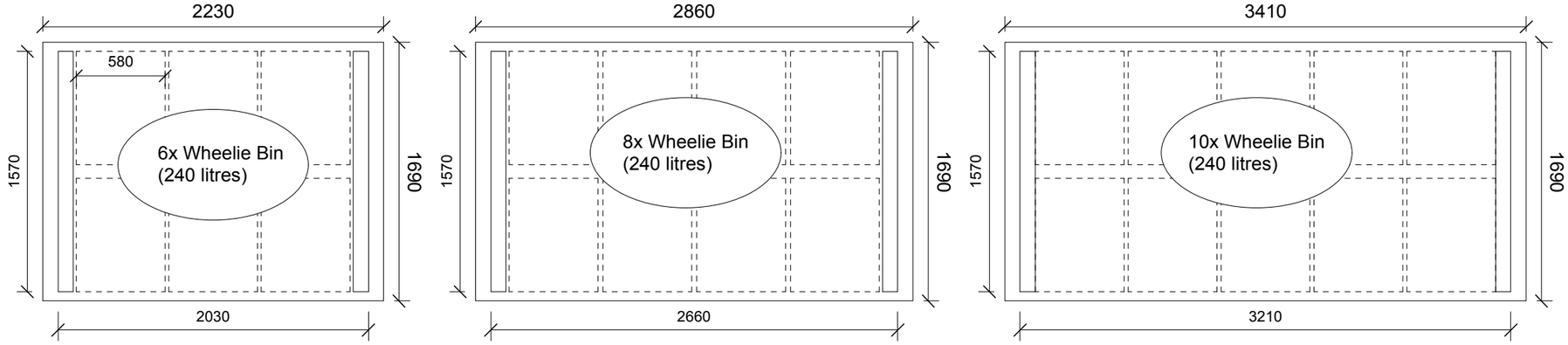

1890 High

EURO BINS



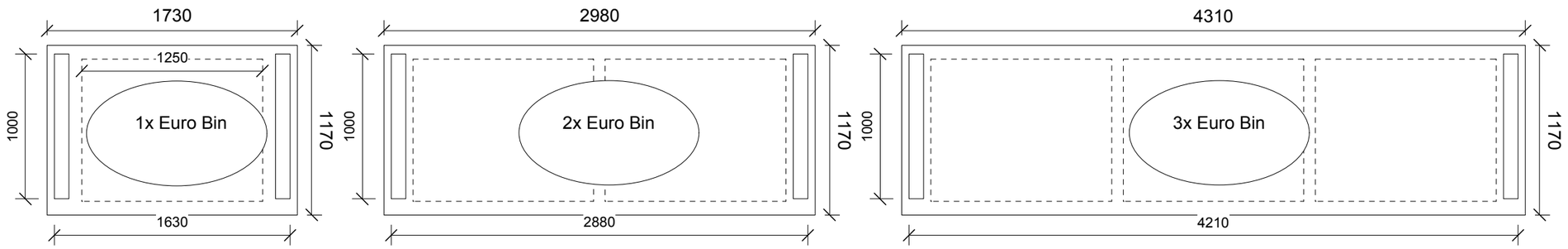

1980 High



CYCLE SHELTERS



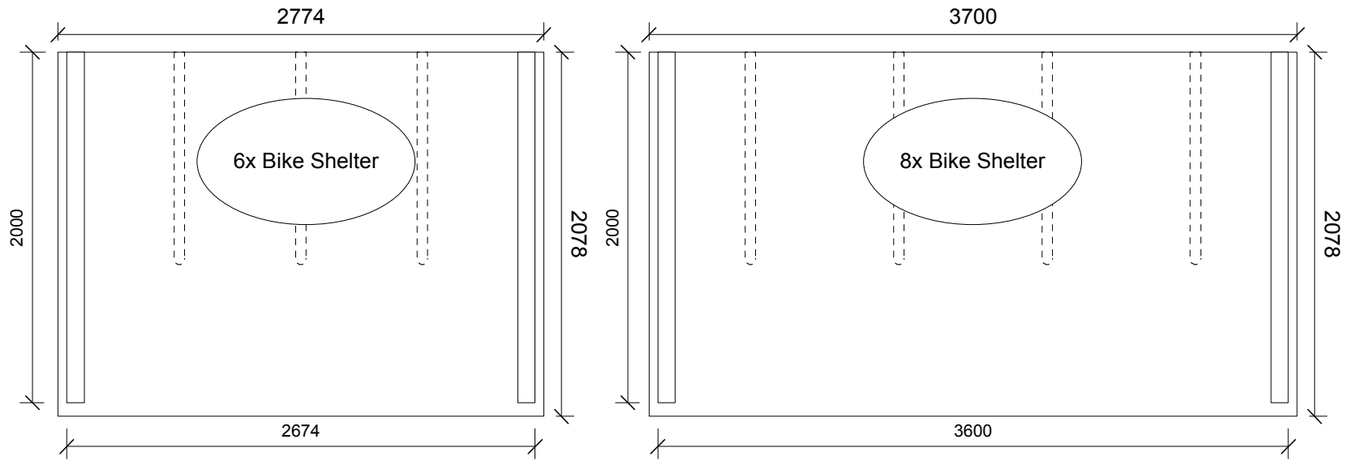

2252 High

Project:
Shelter Dimensions

Drawing:
Wheelie - Euro - Bike

Drawing number:
3_16_A

Date drawn:
25 MAY 2016

Scale:
1:35 @ A3

General notes:
To be read in conjunction with all other relevant drawings schedules and specifications.

Do not scale from this drawing. Use figured dimensions only. If in doubt contact below.

Report all discrepancies to us before commencing construction or fabrication.

Green Roof Shelters Ltd.
115 Bartholomew Road, London, NW5 2BJ
t 020 7485 7618
e info@greenroofshelters.co.uk

© Green Roof Shelters Ltd.

Shelter Sizes Overview.vwx