WORKS ORDER

Customer:	CHANNEL GLAZING	Unglazed	Input Info:	10-03-2021 adam
Reference:	141544 5 EAST LODGE	Supply only	Delivery Date	
Job No. :	**141544 (Item: 1 of 3)**	Page 1 of 5	Print Info:	10-03-2021 9:38 am

Main Options:	
Product	**LINIAR Chamf Casement**
Size	2670 x 1660
Quantity	1
Design	Style 99
Sash	LCW033 Chamf Energy+ T Sa
Cill	LSL150 150mm cill
Colour	White
Sash colour	White
Cill colour	White
Drainage	Concealed/ base
Open in/out	**Open out**
Bead type	**LCW041 28mm Chamfered b**
Handle	1 White Casement Handle
Casement locking	Shootbolt
Friction stay	Standard friction stay
Glazed in/out	Glazed in
Location:	

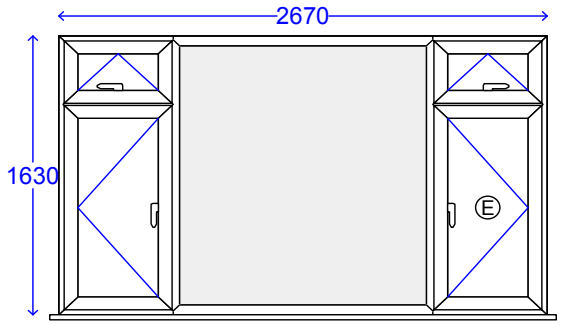

Aperture Options:		**Ref:**
Friction stay	**Egress easyclean**	**(H4)**

Sections required:			**Qty**	**Length**	**End prep**	**Reinforcing**	**Length**
H	Frame	LCW012W 57mm Energy + Fra	2	1635	\-/		
W	Frame	LCW012W 57mm Energy + Fra	2	629	|-/		
W	Frame	LCW012W 57mm Energy + Fra	2	629	\-|		
W	Frame	LCW012W 57mm Energy + Fra	2	1424	|-| *		
H	Structur	LCW022W 67mm Chamf Z-Sec	1	1656	<->		
H	Structur	LCW022W 67mm Chamf Z-Sec	1	1656	<-> *		
W	Structur	LCW021W 67mm Chamf T-Sec	2	675	<->		
H	Sash	LCW033W 75mm Chamf Energy	2	370	\-/ *		
W	Sash	LCW033W 75mm Chamf Energy	2	595	\-/ *		
H	Sash	LCW033W 75mm Chamf Energy	2	1200	\-/ *		
W	Sash	LCW033W 75mm Chamf Energy	2	595	\-/ *		
H	Sash	LCW033W 75mm Chamf Energy	2	370	\-/ *		
W	Sash	LCW033W 75mm Chamf Energy	2	595	\-/ *		
H	Sash	LCW033W 75mm Chamf Energy	2	1200	\-/ *		
W	Sash	LCW033W 75mm Chamf Energy	2	595	\-/ *		
W	Cill	LSL150W 150mm Cill	1	2770	|-|		
Bead type		LCW041W 28mm Chamf Bead		15090			

** - Denotes bar reversed*

Accessories Required:	**Qty**	**Length**

Glass Required:			**Qty**	**Width**	**Height**
A1	4-20-4 Clr Float/ Pilkington KS : 20mm Silver Spacer	Air Filled	1	469	244
A4	4-20-4 Clr Float/ Pilkington KS : 20mm Silver Spacer	Air Filled	1	469	1074
D1	4-20-4 Clr Tuff Float/ Pilkington KS : 20mm Silver Spacer	Air Filled	1	1383	1546
H1	4-20-4 Clr Float/ Pilkington KS : 20mm Silver Spacer	Air Filled	1	469	244
H4	4-20-4 Clr Float/ Pilkington KS : 20mm Silver Spacer	Air Filled	1	469	1074

WORKS ORDER

Customer:	CHANNEL GLAZING	Unglazed	Input Info:	10-03-2021 adam
Reference:	141544 5 EAST LODGE	Supply only	Delivery Date	
Job No. :	**141544 (Item: 1 of 3)**	Page 2 of 5	Print Info:	10-03-2021 9:38 am

	Preparation	Welding	Hanging	Final Inspection
Initials				

WORKS ORDER

Customer:	CHANNEL GLAZING	Unglazed	Input Info:	10-03-2021 adam
Reference:	141544 5 EAST LODGE	Supply only	Delivery Date	
Job No. :	**141544 (Item: 2 of 3)**	Page 3 of 5	Print Info:	10-03-2021 9:38 am

Main Options:	
Product	**LINIAR Chamf Casement**
Size	2870 x 1660
Quantity	1
Design	Style 99
Sash	LCW033 Chamf Energy+ T Sa
Cill	LSL150 150mm cill
Add-on (Right jamb)	GAN211 10mm ali coupler
Colour	White
Sash colour	White
Cill colour	White
Drainage	Concealed/ base
Open in/out	**Open out**
Bead type	**LCW041 28mm Chamfered b**
Handle	1 White Casement Handle
Casement locking	Shootbolt
Friction stay	Standard friction stay
Glazed in/out	Glazed in
Location:	

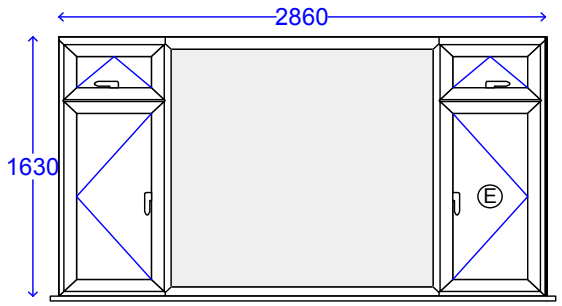

Aperture Options:		**Ref:**
Friction stay	**Egress easyclean**	**(H4)**

Sections required:			**Qty**	**Length**	**End prep**	**Reinforcing**	**Length**
H	Frame	LCW012W 57mm Energy + Fra	2	1615	\-/		
W	Frame	LCW012W 57mm Energy + Fra	1	629	|-/		
W	Frame	LCW012W 57mm Energy + Fra	1	629	\-|		
W	Frame	LCW012W 57mm Energy + Fra	1	1614	|-| *		
W	Frame	LCW016W 77mm Chamf Frame	1	649	|-/		
W	Frame	LCW016W 77mm Chamf Frame	1	649	\-|		
W	Frame	LCW016W 77mm Chamf Frame	1	1614	|-| *		
H	Structur	LCW022W 67mm Chamf Z-Sec	1	1636	<->		
H	Structur	LCW022W 67mm Chamf Z-Sec	1	1636	<-> *		
W	Structur	LCW021W 67mm Chamf T-Sec	2	675	<->		
H	Sash	LCW033W 75mm Chamf Energy	2	350	\-/ *		
W	Sash	LCW033W 75mm Chamf Energy	2	595	\-/ *		
H	Sash	LCW033W 75mm Chamf Energy	2	1200	\-/ *		
W	Sash	LCW033W 75mm Chamf Energy	2	595	\-/ *		
H	Sash	LCW033W 75mm Chamf Energy	2	350	\-/ *		
W	Sash	LCW033W 75mm Chamf Energy	2	595	\-/ *		
H	Sash	LCW033W 75mm Chamf Energy	2	1200	\-/ *		
W	Sash	LCW033W 75mm Chamf Energy	2	595	\-/ *		
W	Cill	LSL150W 150mm Cill	1	2970	|-|		
	Add-on	GAR112 small T trim	2	1630	|-|		
H	Add-on	GAN211 10mm ali coupler White	1	1630	|-|		
Bead type		LCW041W 28mm Chamf Bead		15350			

** - Denotes bar reversed*

Accessories Required:	**Qty**	**Length**

WORKS ORDER

Customer:	CHANNEL GLAZING	Unglazed	Input Info:	10-03-2021 adam
Reference:	141544 5 EAST LODGE	Supply only	Delivery Date	
Job No. :	**141544 (Item: 2 of 3)**	Page 4 of 5	Print Info:	10-03-2021 9:38 am

Glass Required:			**Qty**	**Width**	**Height**
A1	4-20-4 Clr Float/ Pilkington KS : 20mm Silver Spacer	Air Filled	1	469	224
A4	4-20-4 Clr Float/ Pilkington KS : 20mm Silver Spacer	Air Filled	1	469	1074
D1	4-20-4 Clr Tuff Float/ Pilkington KS : 20mm Silver Spacer	Air Filled	1	1573	1526
H1	4-20-4 Clr Float/ Pilkington KS : 20mm Silver Spacer	Air Filled	1	469	224
H4	4-20-4 Clr Float/ Pilkington KS : 20mm Silver Spacer	Air Filled	1	469	1074

	Preparation	**Welding**	**Hanging**	**Final Inspection**
Initials				

WORKS ORDER

Customer:	CHANNEL GLAZING	Unglazed	Input Info:	10-03-2021 adam
Reference:	141544 5 EAST LODGE	Supply only	Delivery Date	
Job No. :	**141544 (Item: 3 of 3)**	Page 5 of 5	Print Info:	10-03-2021 9:38 am

Main Options:	
Product	**LINIAR Chamf Resi Door**
Size	750 x 2420
Quantity	1
Design	Style 11
Threshold	No threshold
Sash	LCW036/037 107mm T/Z Sas
Cill	LSL150 150mm cill
Colour	White
Sash colour	White
Cill colour	White
Drainage	Concealed/ base
Open in/out	**Open out**
Bead type	**LCW041 28mm Chamfered b**
Handle	White Lever/Lever
Door hinge	**Hybrid Hinge - White**
Door lock	**New Millenco**
Cylinder	**Thumbturn cylinder**
Door hinge quantity	3 hinges
Glazed in/out	Glazed in
Door hinge colour	(refer to door hinge)
Location:	

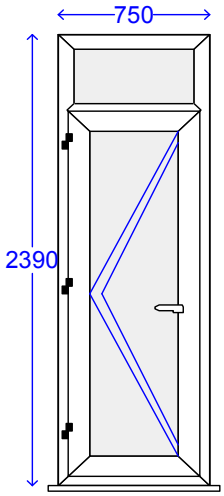

Sections required:			**Qty**	**Length**	**End prep**	**Reinforcing**	**Length**
H	Frame	LCW016W 77mm Chamf Frame	1	404	|-/ *		
H	Frame	LCW016W 77mm Chamf Frame	1	404	\-| *		
H	Frame	LCW016W 77mm Chamf Frame	1	1994	|-/		
H	Frame	LCW016W 77mm Chamf Frame	1	1994	\-|		
W	Frame	LCW016W 77mm Chamf Frame	1	755	\-/		
W	Frame	LCW016W 77mm Chamf Frame	1	755	\-/ *		
W	Structur	LCW022W 67mm Chamf Z-Sec	1	736	<-> *		
H	Sash	LCW036W 107mm Chamf T-Sa	2	1941	\-/ *		
W	Sash	LCW036W 107mm Chamf T-Sa	2	657	\-/ *		
W	Cill	LSL150W 150mm Cill	1	850	|-|		
Bead type		LCW041W 28mm Chamf Bead		6410			

** - Denotes bar reversed*

Accessories Required:	**Qty**	**Length**

Glass Required:			**Qty**	**Width**	**Height**
A1	4-20-4 Clr Tuff Float/ Pilkington KS : 20mm Silver Spacer	Air Filled	1	626	319
A4	4-20-4 Clr Tuff Float/ Pilkington KS : 20mm Silver Spacer	Air Filled	1	468	1751

	Preparation	**Welding**	**Hanging**	**Final Inspection**
Initials				