7 The Driveway

gable

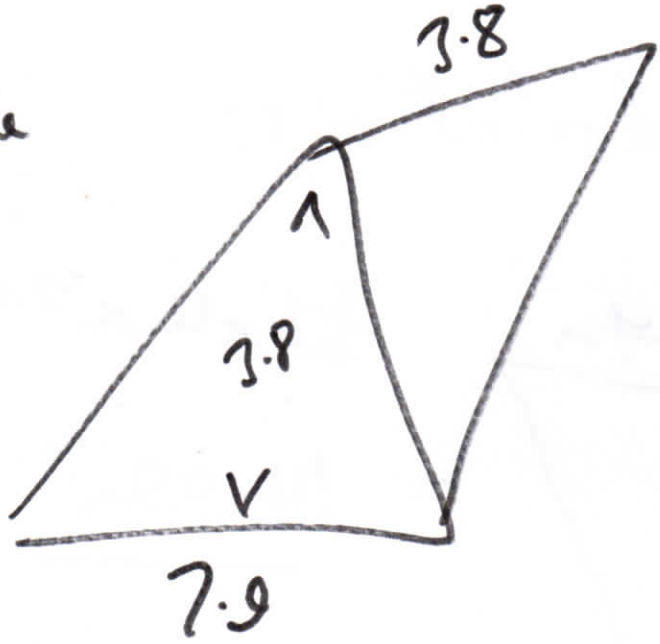

$= 19 m^3$

dormer

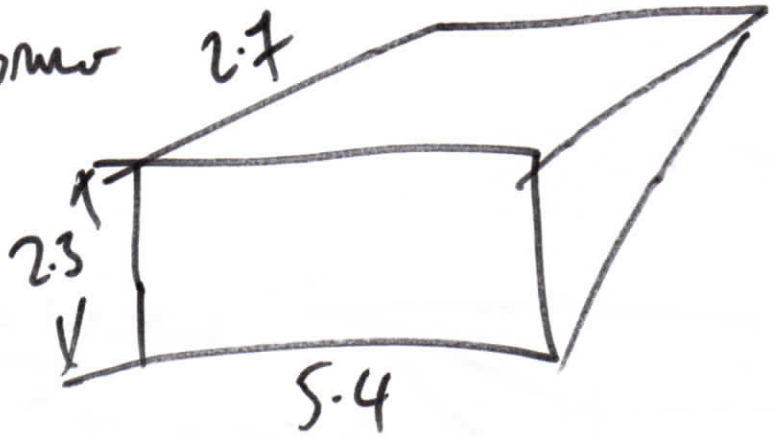

$= 16.7 m^3$

TOTAL $35 m^3$

ok under 50.