# Top view with affected garden

This drawing is for 92 southwick street BN424TJ

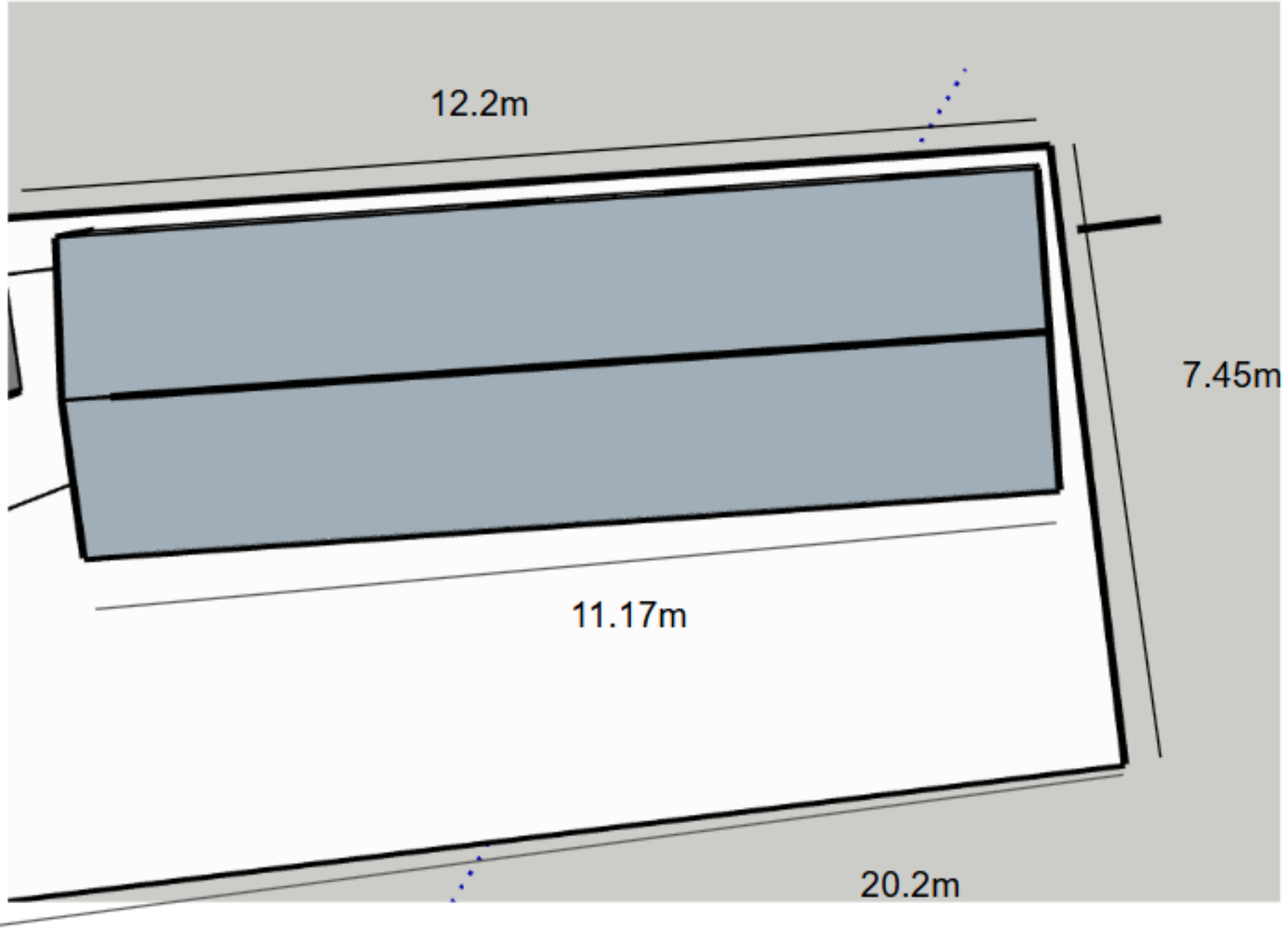


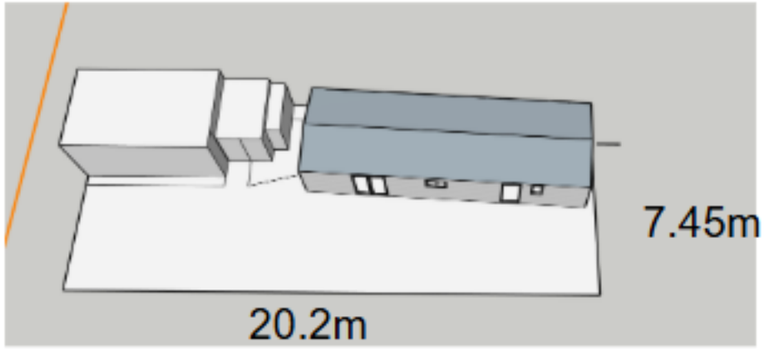


The image above isn't to scale but this shows the size of the whole garden to the caravan including the garage.

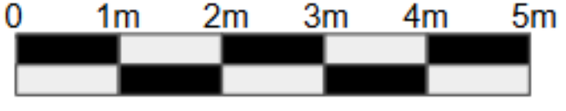


1cm = 1m