Omega Signs Limited, Newmarket Approach, Leeds LS9 0RL T: 0113 240 3000 F: 0113 249 2228 E: info@omega-signs.co.uk W: www.omega-signs.co.uk

Omega Signs® the sign of excellence

Client	Greene King	Scale	1:10, 1:20 @ A3	Signage Colours	RAL 9002 / Write / RAL 875 / Bronze	Created	17-12-12
Project	The Cricketers	Typeface	St Edmunds \ Mercury G1	Building Colours		Designer	NL
Address	Southwick	Artwork	Not Required	Amended by	: Matt.C	Date	: 12-02-13
Approved	L Moss	Page	1 of 6				

THE CRICKETERS

BURY ST EDMUNDS

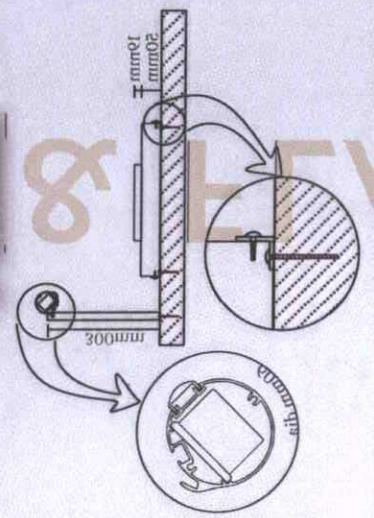

Item 4
1no. Folded aluminium fascia sign with individual letters to be illuminated by LED trough light.
Size: 2700mm x 400mm
Scale: 1:20

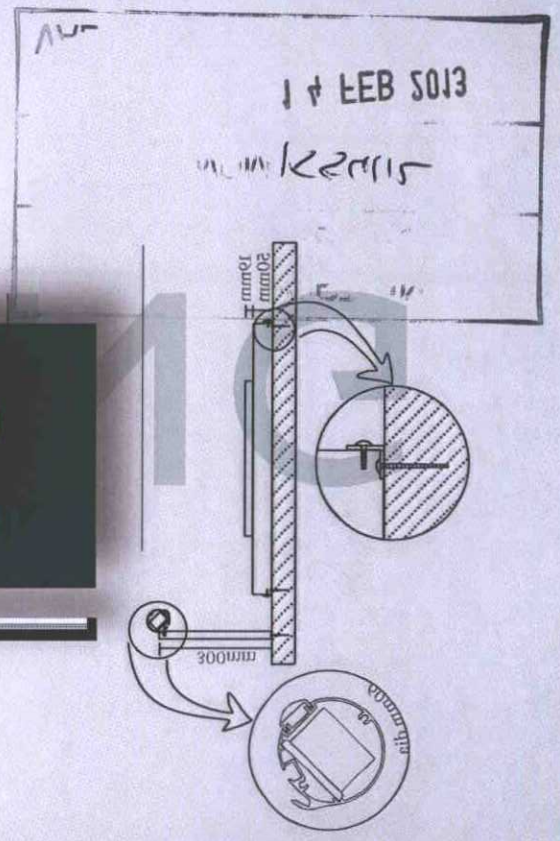

14 FEB 2013

THE CRICKETERS

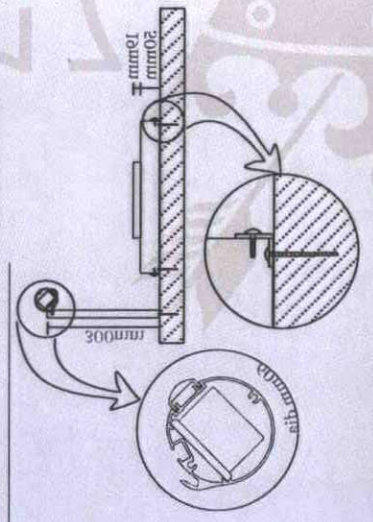

Item 2
1no. Folded aluminium fascia sign with individual letters to be illuminated by LED trough light.
Size: 5670mm x 700mm
Scale: 1:20

THE CRICKETERS

Item 1
1no. Folded aluminium fascia sign with individual letters to be illuminated by LED trough light.
Size: 2700mm x 400mm
Scale: 1:20