COPYRIGHT: THIS DRAWING REMAINS THE PROPERTY OF REHAU LTD. AND SHOULD NOT BE REPRODUCED WITHOUT WRITTEN PERMISSION FROM REHAU LTD.

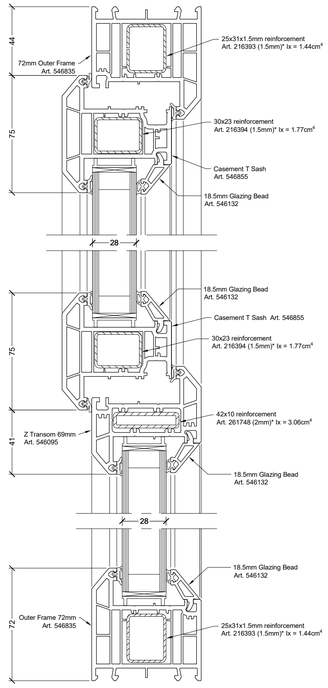

A Details
Scale: 1:2

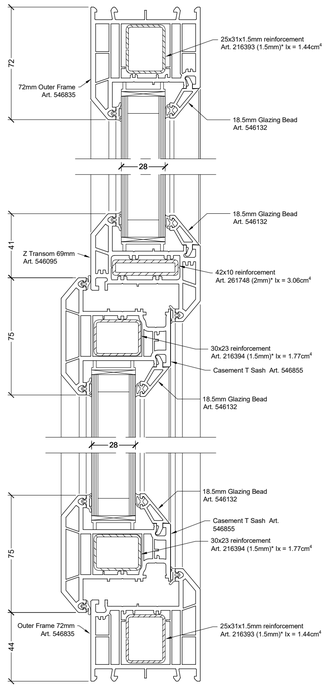

B Details
Scale: 1:2

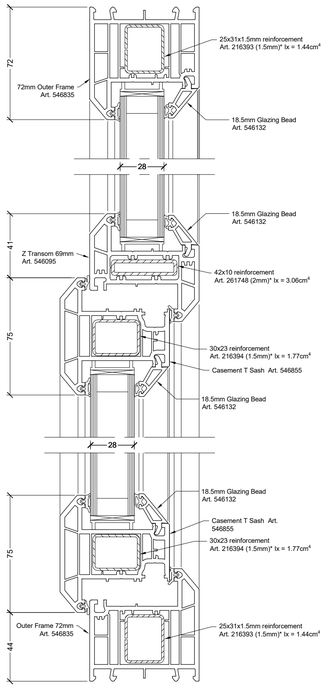

B Details
Scale: 1:2

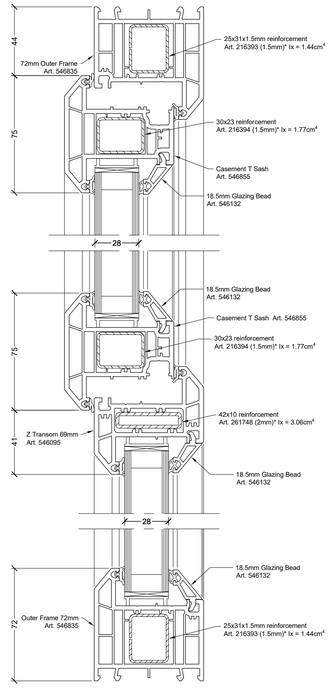

A Details
Scale: 1:2

" All statements, technical information and recommendations are based on experience and are to the best of our knowledge correct but are given without obligation and for guidance purposes only. Their accuracy or completeness is not guaranteed. The suitability of any Rehau products for a specific application should be checked by the contractor in advance"

The under Mentioned relates to general notes for guidance purposes only.

BS 8213-1:2004
(Window Installation/safety and cleaning standard)Which makes reference to design,construction,operation and maintenance of windows.

A risk assessment should be carried out and a written record of the assessment kept, and signed by the client and designer; contractor/fabricator.

Essential considerations:

1. Design for safety in use.
2. Means of escape from Fire.
3. Security from unauthorized entry.
4. Design for safety when cleaning(the minimum height for incorporation of transoms (safety rails in windows above floor level in high rise buildings, two storey's and above).
5. Maintenance.

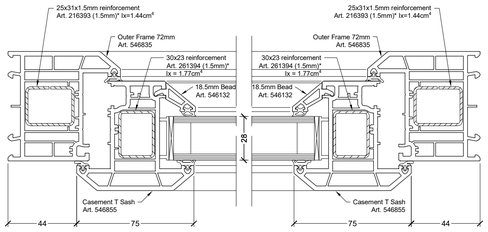

C Details
Scale: 1:2

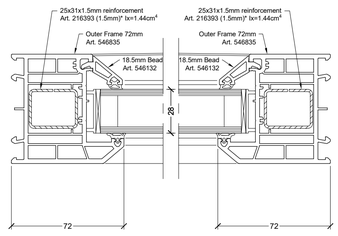

D Details
Scale: 1:2

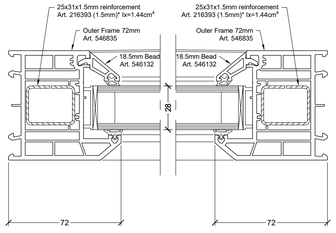

D Details
Scale: 1:2

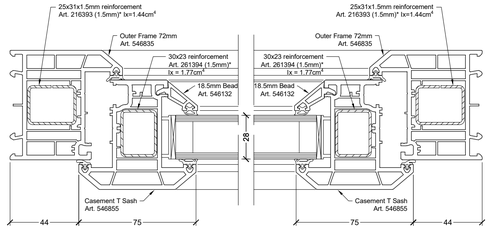

C Details
Scale: 1:2

This drawing is only an INDICATIVE drawing. This is NOT a fabrication Drawing. Do NOT Scale from this drawing.

REHAU - Total 70C & S window system.

All designs subject to REHAU manufacturing guidelines for sash type size/weight/area specifications
Refer to REHAU Manufacturing Instructions 706.620E
For Maximum sash sizes (White/Non white profiles) refer to Maximum sash size Recommendations 700.620EN

For all other Total 70 specifications & recommendations please refer to Total 70 manual or contact Rehau technical support.

White Profiles
Max.profile lengths for fixed lights = 3.0M Max.area = 6M²
Max.profile lengths for multi lights = 4.0M Max.area = 6M²
Coloured Profiles
Max.profile lengths for fixed lights = 3.0M Max.area = 4M²
Max.profile lengths for multi lights = 3.0M Max.area = 4M²

Windloading calculated using BS 6375-1-2015 and / or EN 1991-1-4 2005

Post Code	BN14 7DT
Building Design height M	6.00
Resultant windload Pa	535

DATE:	REV:	DRAWING CHANGE DETAILS:	DRAWN BY:

REHAU®
Unlimited Polymer Solutions

REHAU Ltd
Hill Court,
Nr. Walford,
Ross-on-Wye,
Herefordshire,
HR9 5QN
Tel.: +44 (0)1989 762600
Fax: +44 (0)1989 762601

30th April 2025	Project:	Precision - Newton				
	Title:	Section details				
1:2	Project No:	25-305-BN147DT	-S1	Revision No:		
A1	DRAWN BY:	P A Pell	CHECKED BY:	----	SALES PERSON:	Kevin O'Neill