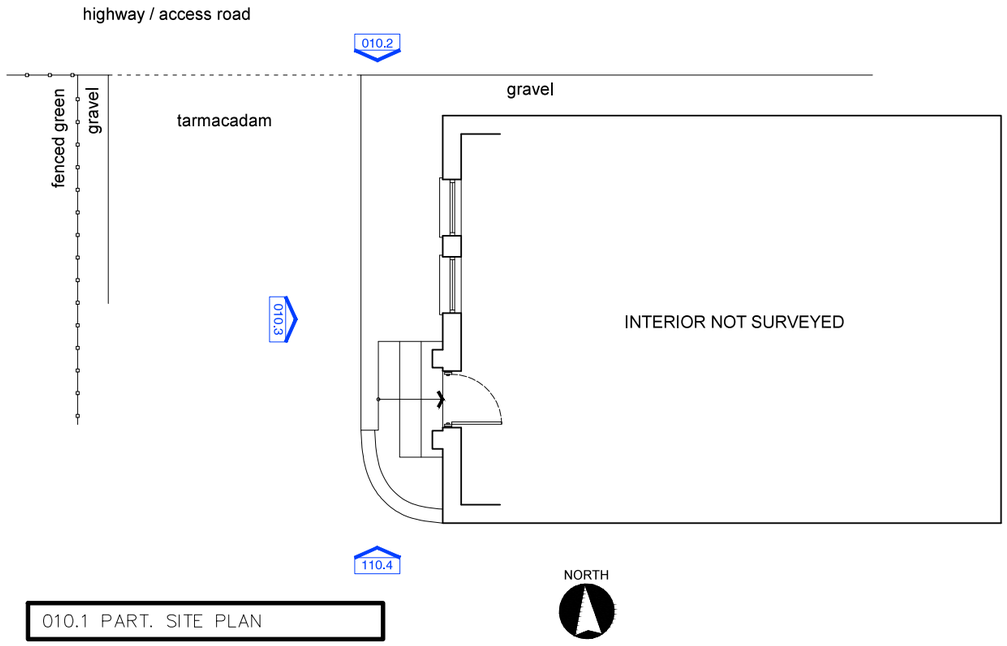


010.1 PART. SITE PLAN

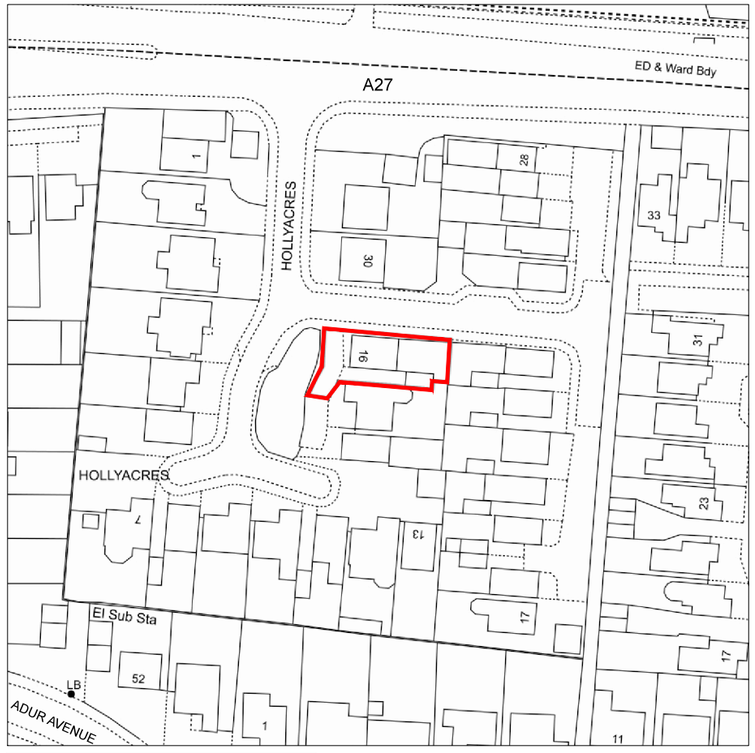


LOCATION PLAN scale 1:1250

NORTH

0 50 metres

18

© Crown copyright and database rights, 2024. Ordnance Survey 0100031673 Created using Plans by Emapsite

SITE AREA: 282m²

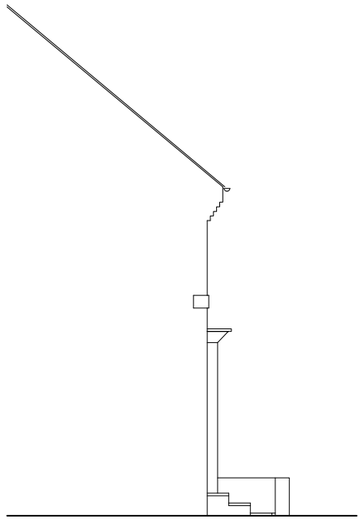

010.2 PART. SIDE ELEV.



010.3 FRONT ELEV.

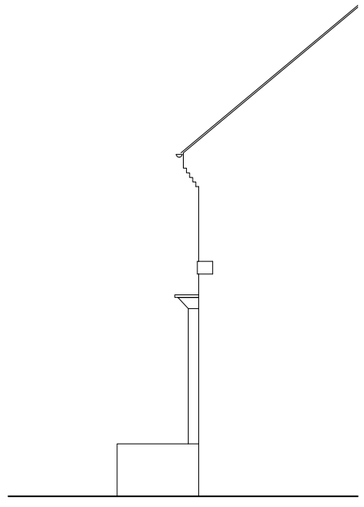

010.4 PART. SIDE ELEV.

0 5 10 metres

**BookerArchitectural**
Tom Booker
tom@tombooker.co.uk
07906 630 565

ALL DIMENSIONS TO BE CHECKED ON SITE
this plan is for the purposes intended at the time of issue
the author accepts no liability for any other use

Revisions:

project: Access Ramp (retrospective)
site: 16 Holyacres, Worthing, BN13 3TD

drwg no.: 0215/PP/010
rev: A
date: 27/05/25
scale: 1:100 @ A3

# PRE-EXISTING PLANS AND ELEVATIONS