VIEW C

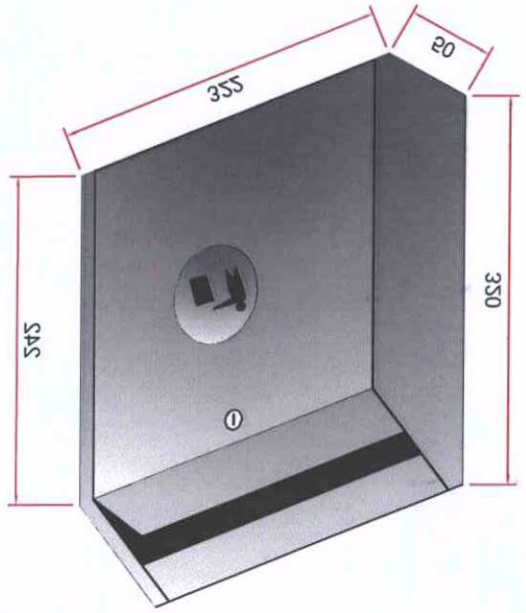

VIEW A

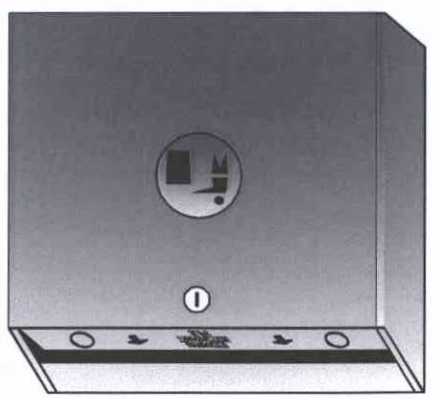

VIEW B

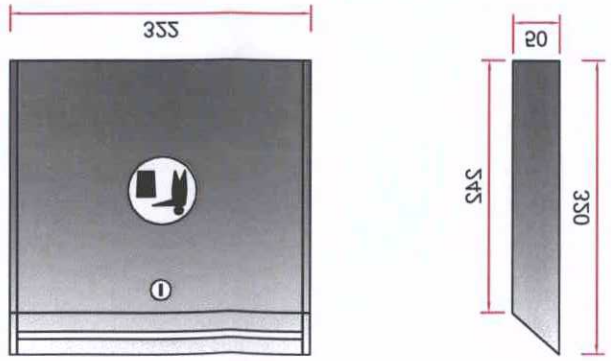

ATM Installation & Project Management
www.complete-tech.co.uk
01709 821757
Complete Technical Services Ltd.

REF/DRG NO. CTS0187	SHEET 01	REVISION 00
DRAWN BM	DATE 24-08-09	SCALE N.T.S

TITLE RECEIPT/LITTER BIN

SITE ADDRESS



MR / 11 / 0510/NOV
TP REF. NO.
DEPOSITED 23/3/11
BOROUGH OF WORTHING
T.P. OFFICE COPY