PLANNING DIVISION
PLAN No. Aab10808
DATE RECEIVED 2 FEB 2008

Application for consent to display an advertisement(s). Town and Country Planning (Control of Advertisement) Regulations 2007

Publication of planning applications on council web sites
Please note that with the exception of applicant contact details and Certificates of Ownership, the information provided on this application form and in supporting documents may be published on the council's website.
If any other information that is provided as part of the application which falls within the definition of personal data under the Data Protection Act and is not to be published on the council's website, please contact the council's planning department.

1. Applicant Name, Address and Contact Details

Title: Mr | First name: Richard | Surname: Tonks

Company name: Fullers Smith & Turner PLC

Street address: Griffin Brewery
Chiswick Lane South

Town/City: London
County:
Country:
Postcode: W4 2QB

	Country Code	National Number	Extension Number
Telephone number:			
Mobile number:			
Fax number:			

Email address:

Are you an agent acting on behalf of the applicant? (•) Yes ( ) No

2. Agent Name, Address and Contact Details

Title: Mr | First Name: Richard | Surname: Tonks

Company name: Omega Signs Limited

Street address: Newmarket Approach

Town/City: Leeds
County: West Yorkshire
Country: England
Postcode: LS9 0RJ

	Country Code	National Number	Extension Number
Telephone number:	0113	240 3000	
Mobile number:			
Fax number:			

Email address: richard.t@omega-signs.co.uk

3. Site Address Details

Full postal address of the site (including full postcode where available)

House: 87 Suffix:

House name:

Street address: High Street

Town/City: SHOREHAM-BY-SEA

County: West Sussex

Postcode: BN43 5DE

Description of location or a grid reference
(must be completed if postcode is not known):

Easting: 521328

Northing: 105043

Description:

4. Pre-application Advice

Has assistance or prior advice been sought from the local authority about this application? ◯ Yes *(5)* No

5. Neighbour and Community Consultation

Have you consulted your neighbours or the local community about the proposal? Q Yes ◉ No

6. Council Employee / Member

Is the applicant or agent related to any member of staff or elected member of the council? ◯ Yes ◉ No

7. Description of Proposed Advertisement(s)

Please describe the proposed advertisement(s):

Replacement public house signage

How many of the following type of advertisements are you applying for?

Fascia sign(s) 0 Projecting or hanging sign(s) 0 Hoarding(s) 0 Other 1

Please describe:

There are 4 signs in total plus 6 lanterns please see attached drawing for details (80097S01)

8. Advertisement Display

Is the advertisement(s) you are applying for already in place? ◯ Yes ◉ No

Is an existing advertisement(s) to be removed and replaced by the advertisement(s) in this proposal? ◉ Yes ◯ No Q Not Applicable

If Yes to either or both above, please show the existing sign(s) on an elevation drawing or photograph and state the references for the drawing(s) or photograph(s).

80097S01

Will the proposed advertisement(s) project over a footpath or other public highway? ◉ Yes Q No

9. Advertisement(s) Period

Please state the period of time for which consent is sought for the advertisement

From: 13/02/2008 To: 13/02/2013

10. Interest in the Land

Does the applicant own the land or buildings where the adverts are to be placed? ◉ Yes Q No

11 (d). Details of Proposed Advertisement(s) - Other Sign

What is the height from the ground to the base of the advertisement (in'metres)? See Drawings m

What is the maximum projection of the advertisement from face of building (in metres)? See Drawings I m

What are the dimensions of the proposed advertisement? Height: See Draw x Width: See Draw x Depth: See Draw metres

What materials will the sign be made of?

See Drawings

What is the maximum height of any of the individual letters and symbols (in centimetres)? See Drawings I cm

The colour of text and background:

See Drawings

Will the sign be illuminated? (•) Yes ( ) No

Will the sign be illuminated internally or externally? ( ) Internally (•) Externally

Illuminance Levels: 75max cd/m

Will the illumination be static or intermittent? (•) Static Q Intermittent

12. Site Visit

Can the site be seen from a public road, public footpath, bridleway or other public land? (•) Yes O No

If the planning authority needs to make an appointment to carry out a site visit, whom should they contact? (Please select only one)

(•) The agent O The applicant ( ) Other person

13. Declaration

I/we hereby apply for planning permission/consent as described in this form and the accompanying plans/drawings and additional information. ☒

Date 13/02/2008

Ordnance Survey®

OS Sitemap™



Produced 12.02.2008 from the Ordnance Survey National Geographic Database and incorporating surveyed revision available at this date. © Crown Copyright 2008.

Reproduction in whole or part is prohibited without the prior permission of Ordnance Survey.

Ordnance Survey and the OS Symbol are registered trademarks and OS Sitemap is a trademark of Ordnance Survey, the national mapping agency of Great Britain.

The representation of a road, track or path is no evidence of a right of way.

The representation of features as lines is no evidence of a property boundary.

Metres
0 20 40

Scale 1:1250

Supplied by: **Blackwells**
Serial number: 00783000
Centre coordinates: 521326 105048

Further information can be found on the OS Sitemap Information leaflet or the Ordnance Survey web site: www.ordnancesurvey.co.uk

The Bridge Inn

87 High Street

Shoreham by Sea

BN43 5DE

PLANNING
PLAN No. A080383
DATE 21 FEB 2008

Date	13/02/08	HO	80097S01
Designer	K Vipass	**Issue**	
Approved	L. Wilkinson	**Sheet**	1 of 10

BLOCK PLAN
Scale 1:500

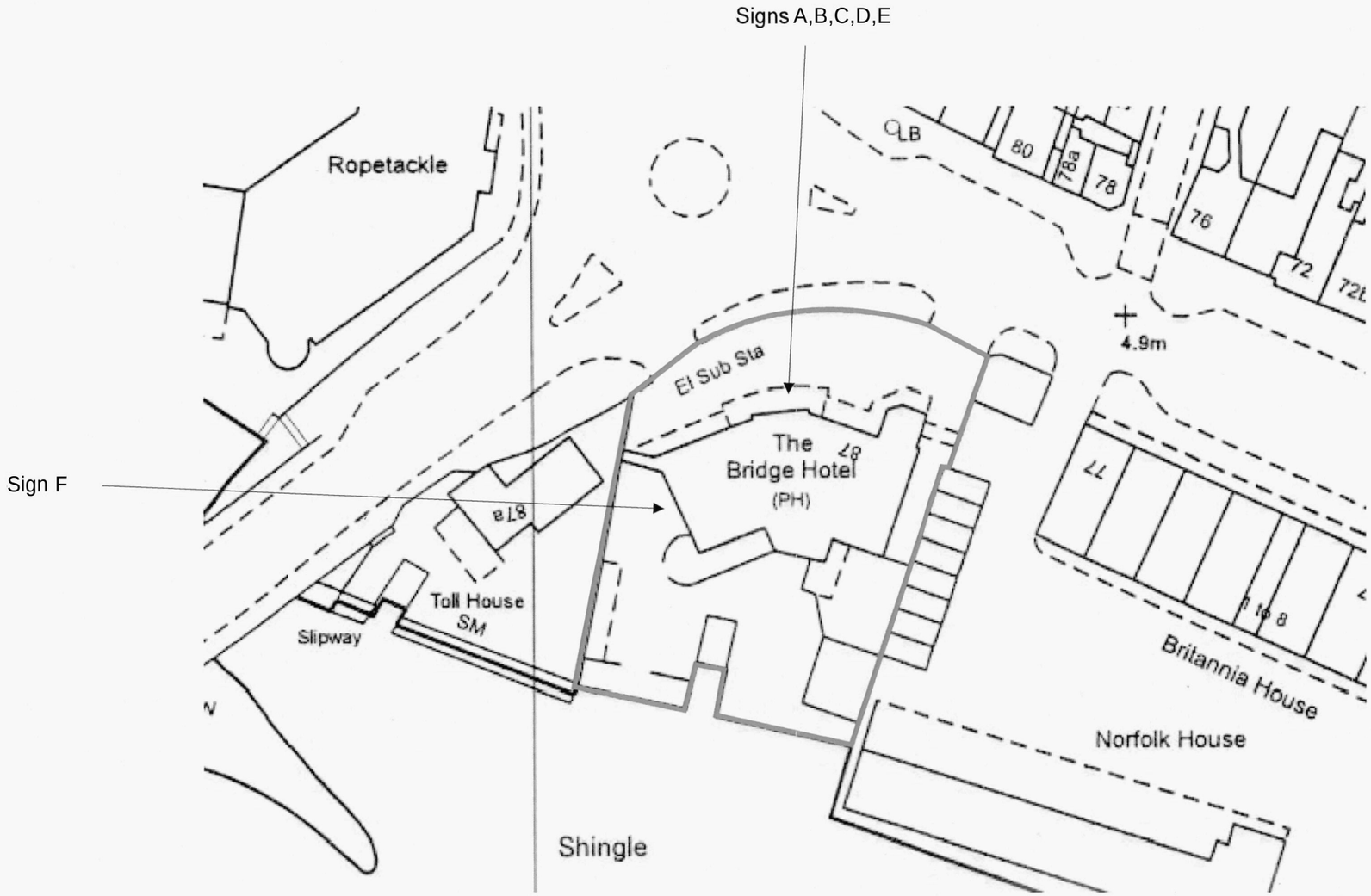

PLANNING
PLAN No. Ax/0108/08
DATE RECEIVED 21 FEB 2008

Date	13/02/08	NO	80097S01
Designer	K Vipass	**Issue**	
Approved	L. Wilkinson	**Sheet**	2 of 10



SIGN A. 5 No. Small half lanterns
Size of lantern 330 x 481 mm

Height Above Ground Level = 2.2m
Material = Pained aluminium & glass
Fixings = Steel wall fixings
Projection = 250mm
Illuminosity = 65cpsm





SIGN B. 1 No. Set of 250mm high individual letters
Sign to be illuminated by 5 x overhead spotlight
(please see lighting spec sheet for details)
Display size 3600 x 250mm overall

Height Above Ground Level = 3.2m
Material = Chiselled resin letters with gold leaf faces
Fixings = Brass locator fixings hidden behind letters
Projection = 30mm overall
Illuminosity = 75 cd/m2 per side



INDIVIDUAL LETTERS
Finished gold with red returns.



SIGN C. 1No. 1200 x 780mm Cartouche
Sign to be illuminated from above by 2 x flood lights
(please see lighting spec sheet)

Height Above Ground Level = 5m
Material = Hand painted GRP
Fixings = treaded rod hidden behind cartouche
Profile = 40mm
Illuminosity = 75 cd/m2 per side

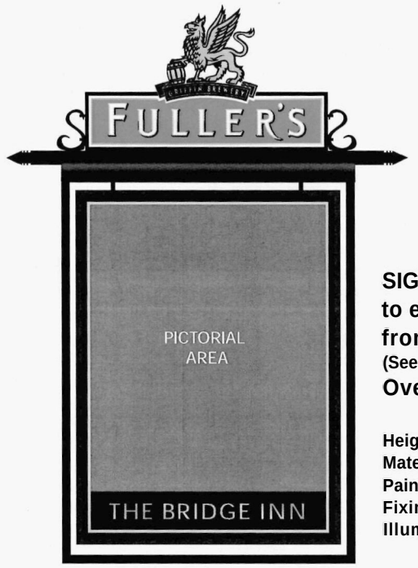

SIGN D. Pictorial sign & 825mm cartouche header
to existing concrete pillar. Sign to be illuminated
from above by troughlights
(See Spec sheet for details)
Overall panel size 9000 x 1200mm

Height Above Ground Level = 3m
Material = Painted steel bracket /
Painted aluminium panels, Gilded/hanpainted GRP cartouche
Fixings = Steel bracket bolted to the concrete post
Illuminosity of sign = 72 cd/m2 per side

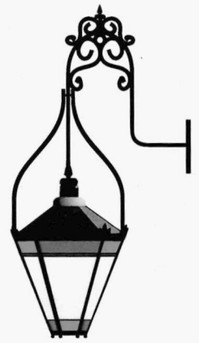

SIGN E. 1 No. Medium lanterns on loop brackets
Size of lantern 400 x 567mm

Height Above Ground Level = 2.8m
Material = Pained aluminium & glass
Fixings = Steel wall fixings
Projection = 600mm
Illuminosity = 65cpsm

PLANNING
PLAN No.
DATE RECEIVED
21 FEB 2008



SIGN F. 1 No. Fascia sign 4000 x 400mm complete with a set of 200mm high individual letters to fit flush to panel. Sign to be illuminated by overhead troughlight (please see lighting spec sheet for details)

Height Above Ground Level = 4.5m
Material = Painted aluminium panel and frame /
Chiselled resin letters with gold leaf faces
Fixings = Aluminium anglefixings hidden behind sign
Projection = 50mm overall
Illuminosity = 75 cd/m2 per side



INDIVIDUAL LETTERS
Finished gold with red returns.

Omega Signs Limited, Newmarket Approach, Leeds LS9 0RJ T: 0113 240 3000 F: 0113 249 2228 E: info@omega-signs.co.uk W: www.omega-signs.co.uk

Omega Signs

This scheme is a visual representation of our signage proposal. Sizes, colours and physical attributes of the actual signage may vary due to the limitations of the manufacturing process

This document is the property of Omega Signs Ltd. and must not be passed to third parties without prior consent Any unauthorised use of this document will result in a design fee being charged.

Copyright © Omega Signs 2007.

Client	Fullers	**Scale**	1:20	**Date**	13/02/08	**NO**	80097S01
Project	The Bridge Inn	**Typeface**	Futura Hv BT / Snell Blk BT	**Designer**	K Vipass	**Issue**	
Address	Shoreham by Sea	**Artwork**	Not Required	**Approved**	L. Wilkinson	**Sheet**	3 of 10

BUILDING COLOURS

White • window and door frames, stonework to top and bottom of fascia areas and stairs (currently white)

Black • External doors, pipework, guttering, bargeboards, window sills

SIGNAGE COLOUR

Deep Brunswick Green

PROPOSED SIGNAGE



PLANNING
PLAN No. A06/0108/08
DATE RECEIVED 21 FEB 2008

Omega Signs Limited, Newmarket Approach, Leeds LS9 ORJ T: 0113 240 3000 F: 0113 249 2228 E: info@omega-stgns.co.uk W: www.omega-signs.co.uk

Omega Signs

This scheme is a visual representation of our signage proposal. Sizes, colours and physical attributes of the actual signage may vary due to the limitations of the manufacturing process

This document is the property of Omega Signs Ltd. and must not be passed to third parties without prior consent. Any unauthorised use of this document will result in a design fee being charged.

Copyright© Omega Signs 2007.

Client	Fullers	**Scale**	1:50
Project	The Bridge Inn	**Typeface**	Futura Hv BT / Snell Blk BT
Address	Shoreham by Sea	**Artwork**	Not Required

BUILDING COLOURS

White • window and door frames, stonework to top and bottom of fascia areas and stairs (currently **white**)

Black • External doors, **pipework**, guttering, **bargeboards**, window sills

SIGNAGE COLOUR

Deep Brunswick Green

Date	13/02/08	**NO**	80097S01
Designer	K Vipass	**Issue**	
Approved	L. Wilkinson	**Sheet**	4 of 10

EXISTING SIGNAGE



PLANNING
PLAN No. A0010368
DATE 21 FEB 2008

Omega Signs Limited, Newmarket Approach, Leeds LS9 ORJ T: 0113 240 3000 F: 0113 249 2228 E: info@omega-signs.co.uk W: www.omega-stgns.co.uk

Omega Signs

This scheme is a visual representation of our signage proposal. Sizes, colours and physical attributes of the actual signage may vary due to the limitations of the manufacturing process

This document is the property of Omega Signs Ltd, and must not be passed to third parties without prior consent. Any unauthorised use of this document will result in a design fee being charged.

Copyright© Omega Signs 2007.

Client	Fullers	**Scale**	1:50
Project	The Bridge Inn	**Typeface**	Futura Hv BT / Snell Blk BT
Address	Shoreham by Sea	**Artwork**	Not Required

BUILDING COLOURS

White • window **and** door frames, stonework to top and bottom of fascia areas and stairs (currently **white)**

Black • External doors, **pipework, guttering, bargeboards,** window **sills**

SIGNAGE COLOUR

Deep Brunswick Green

Date	13/02/08	**NO**	80097S01
Designer	K Vipass	**Issue**	
Approved	L. Wilkinson	**Sheet**	5 of 10

PROPOSED SIGNAGE

F



PLANNING
PLAN No. A06/0308
DATE 21 FEB 2008

Omega Signs Limited, Newmarket Approach, Leeds LS9 0RJ T: 0113 240 3000 F: 0113 249 2228 E: info@omega-signs.co.uk W: www.omega-signs.co.uk

Omega Signs

This scheme is a visual representation of our signage proposal. Sizes, colours and physical attributes of the actual signage may vary due to the limitations of the manufacturing process

This document is the property of Omega Signs Ltd. and must not be passed to third parties without prior consent Any unauthorised use of this document will result in a design fee being charged.

Copyright © Omega Signs 2007.

Client Fullers

Project The Bridge Inn

Address Shoreham by Sea

Scale 1:50

Typeface Futura Hv BT / Snell Blk BT

Artwork Not Required

BUILDING COLOURS

White - window and door **frames**, stonework to top and bottom of fascia areas and stairs **(currently white)**

Black - External doors, **pipework**, guttering, **bargeboards**, window sills

SIGNAGE COLOUR

Deep **Brunswick** Green

Date 13/02/08 **NO** 80097S01

Designer K Vipass **Issue**

Approved L. Wilkinson **Sheet** 6 of 10

EXISTING SIGNAGE



PLANNING
PLAN No. Ap/08/0108
DATE 21 FEB 2008

Omega Signs Limited, Newmarket Approach, Leeds LS9 ORJ T: 0113 240 3000 F: 0113 249 2228 E: info@omega-signs.co.uk W: www.omega-signs.co.uk

Omega Signs

This scheme is a visual representation of our signage proposal. Sizes, colours and physical attributes of the actual signage may vary due to the limitations of the manufacturing process

This document is the property of Omega Signs Ltd. and must not be passed to third parties without prior consent Any unauthorised use of this document will result in a design (ee being charged.

Copyright © Omega Signs 2007.

Client Fullers

Project The Bridge Inn

Address Shoreham by Sea

Scale 1:50

Typeface Futura Hv BT / Snell Blk BT

Artwork Not Required

BUILDING COLOURS

White • window and door frames, stonework to top and bottom of fascia areas and stairs (currently white)

Black • External doors, pipework, guttering, bargeboards, window sills

SIGNAGE COLOUR

Deep Brunswick Green

Date 13/02/08 NO 80097S01

Designer K Vipass Issue

Approved L. Wilkinson **Sheet** 7 of 10

bullet



standard features

Die-cast aluminium head and transformer casing
Steel projection arm
Screw on cap for easy lamp maintenance
Philips 50 watt dichroic halogen low voltage lamp
Swivel head for directing light output
Seal I and rated to IP65
For both up or down lighting applications
Choice of 4 projections
Choice of 3 finishes - black, white or gold
Ex-stock, next-day delivery

options

BS or RAL colours upon request
Non-standard projection brackets on request

technical specification

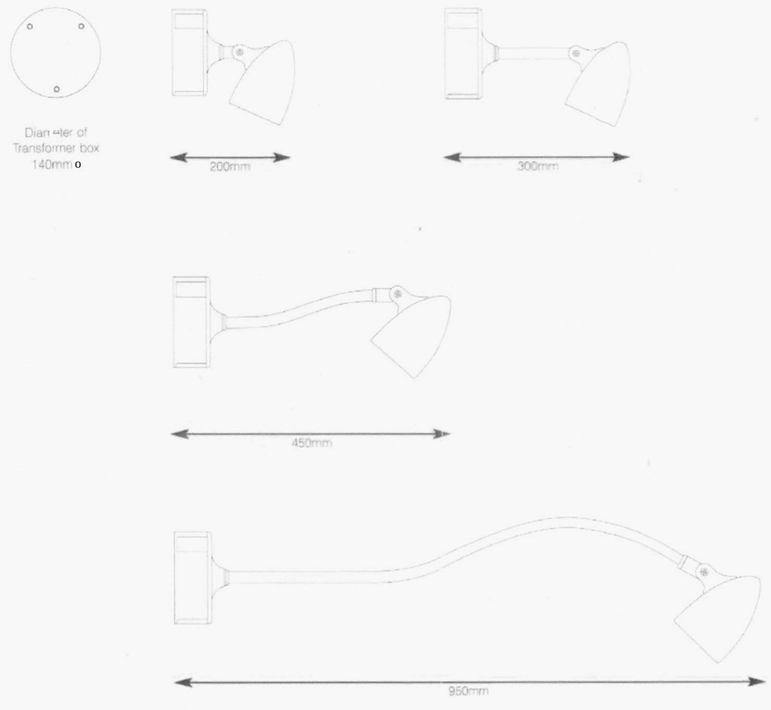

DUR DISTR NCIL
PLANNING N
PLAN No. Ar0108/08
DATE RECEIVED 21 FEB 2008

Date	13/02/08	HO	80097S01
Designer	K Vipass	**Issue**	
Approved	L. Wilkinson	**Sheet**	**8 of** 10

To illuminate signs D,F

prices and specifications

signlux

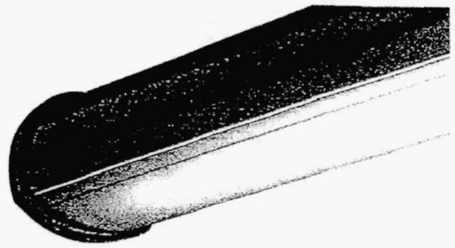

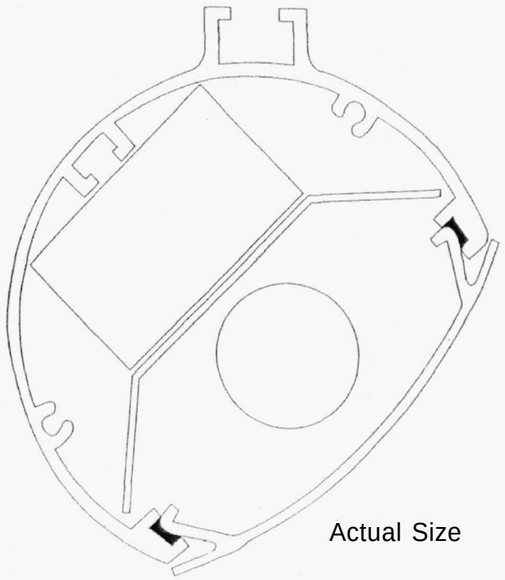

Actual Size

technical specification

Specially designed aluminium extrusion supplied up lo 6150mm (20ft.) lengths which can be pined together using cast aluminium connectors. Screw-on cast aluminium end caps

Standard 200mm adjustable fixing brackets

Philips T8 triphosphor fluorescent lamp giving a powerful output with excellent colour rendering

Clip-in polycarbonate diffuser lor easy tube maintenance

Mirror reflector for high performance output

Sealed and rated lo IP64 for up or down lighting situations

Polyester powder coat finish black & white standard

Ex-stock delivery, whatever length

options

100, 300. 400 & 500mm projection brackets are also available from stock

Non-standard brackets available upon request

BS or RAL colours upon request

Full photometrictest details available upon request

Photo electrical cell switches

standard mounting brackets

Adjustable bracket

Signs D

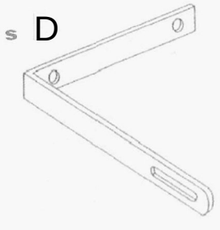

Pictorial bracket set

Signs F

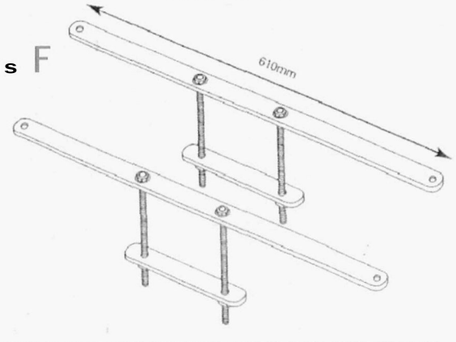

optional mounting brackets

Vert. & twist bracket

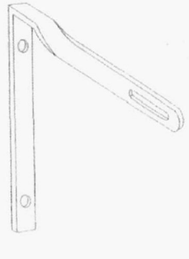

Flat twist bracket

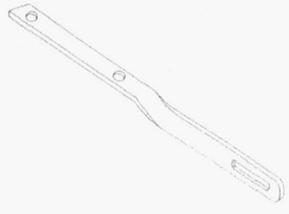

DUR DIST... NCIL
PLANNING ... ON
PLAN No. Apd0108b8
DATE 21 F... 2008
RECE...

Date	13/02/08	MO	80097S01
Designer	K Vipass	**Issue**	
Approved	L. Wilkinson	**Sheet**	9 of 10

10

150 Powerflood

SIGN LIGHTING

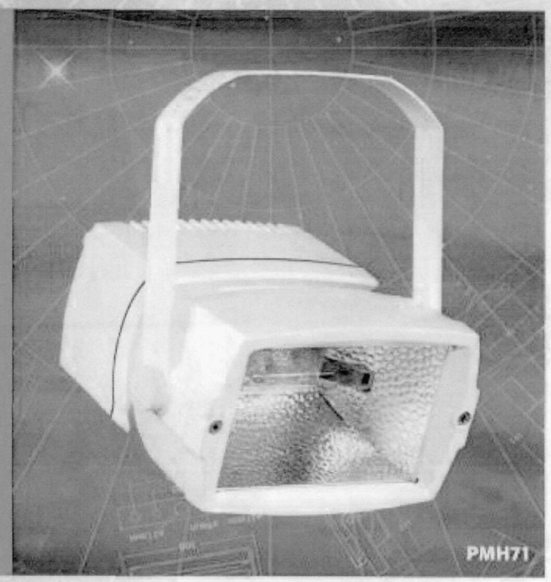

SPECIFICATION

- MOV supply
- Control gear suitable for 70W & 150W MBI, CDM 4 SON double ended lamp options
- 360° rotation
- 90° angle of tilt
- IP65 dust & jet proof
- Electrica ... ss I
- Se... ind gear components to ensure optimum running temperatures
- Pre-wired with flying lead

CONSTRUCTION

- Body - Die cast aluminium pre-treated and powder coated
- Glass • Tempered safety glass
- Reflector - High Performance aluminium reflector
- Gaskets - Blue

LAMP TYPES

70-150W MBI
70-150W CDM
70-150W SON

NARROW BEAM REFLECTOR OPTION



FOR MOUNTING OPTIONS & ACCESSORIES SEE PAGE 18

FOR ORDERING AND FURTHER INFORMATION
0113 2450788

To illuminate sign C

Powerflood 150

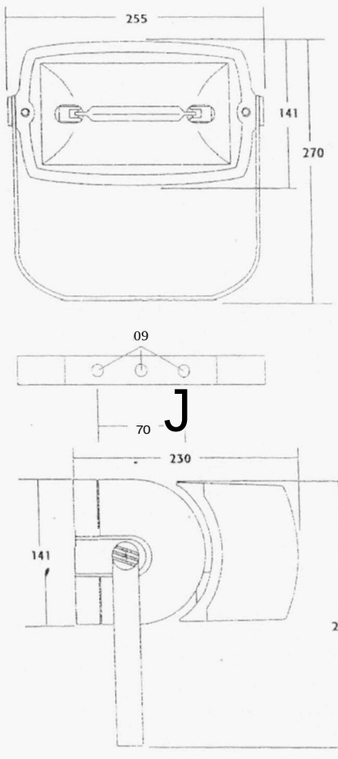

J

Wattage	Colour	Catalogue No.	Weight kg	Net trade price
70W	Black	PFH70	5.20	96.60
	White	PFH71	5.20	96.60
	Satin Aluminium	PFH74	5.20	96.60
150W	Black	PFH150	5.70	99.60
	White	PFH151	5.70	99.60
	Satin Aluminium	PFH154	5.70	99.60

> Lamp not included.

For optional Narrow Beam Reflector add the suffix /NB and add 9.60 e.g. PMH70/NB - 96.60 + 9.60 = 106.20

ADUR DISTRICT COUNCIL
PLANNING DIVISION
PLAN No. Arxb108/08
DATE 2 ... 2008

Date	13/02/08	NO	80097S01
Designer	K Vipass	Issue	
Approved	L. Wilkinson	Sheet	10 of 10