AMENDMENT

THIS DRAWING IS THE PROPERTY OF STEPHEN BROMLEY ASSOCIATES AND MUST NOT BE REPRODUCED IN PART OR IN WHOLE OR USED FOR THE EXECUTION OF WORKS WITHOUT THEIR PERMISSION.
DO NOT SCALE EXCEPT FOR PLANNING PURPOSES.
ALL DIMENSIONS TO BE CHECKED ON SITE PRIOR TO COMMENCEMENT OF ANY CONSTRUCTION WORKS AND STEPHEN BROMLEY ASSOCIATES NOTIFIED OF ANY DISCREPANCIES.
WE CAN TAKE NO RESPONSIBILITY FOR ANY WORKS UNTIL THEY ARE CHECKED AND CERTIFIED TO COMPLY BY THE RELEVANT BUILDING CONTROL.

ADUR & WORTHING
PLANNING SERVICES
PLAN AWDM/0604/19
DATE VALID Rec: 23/7/19



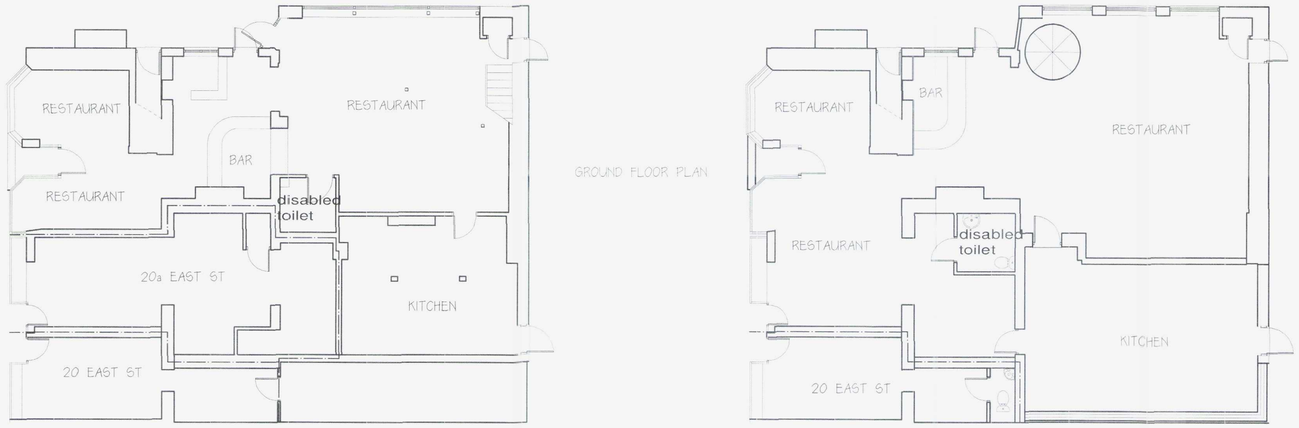

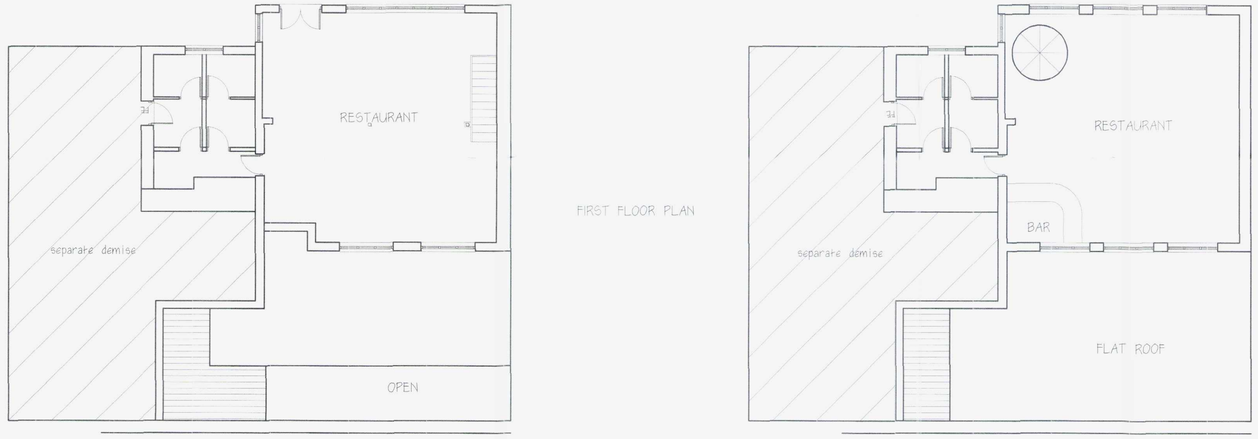

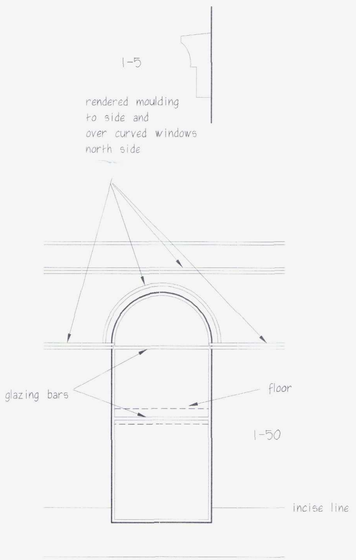

Window type Platignum NRG
ref AW604-AW686-AW663

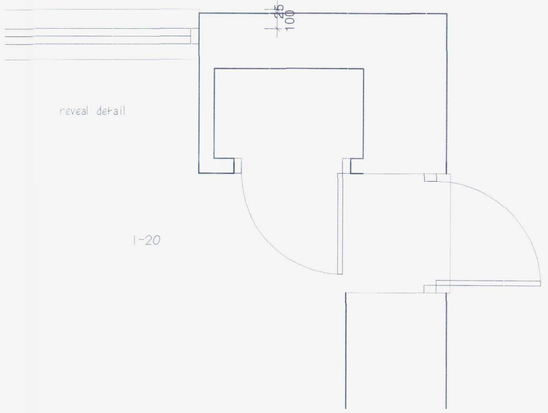

STEPHEN BROMLEY ASSOCIATES
5 WEST ST SHOREHAM BY SEA
WEST SUSSEX

EXTENSION AND ALTERATIONS

AT SCALE 1-100

LA GALLERIA
20, 20a 22 EAST STREET
SHOREHAM BY SEA

Drawing no 8342-20e

Window colour
painted [illegible] to
[illegible]