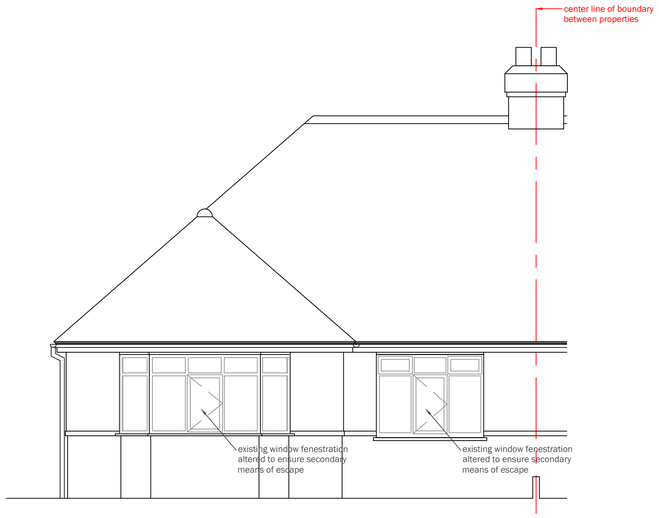

Front elevation (West)

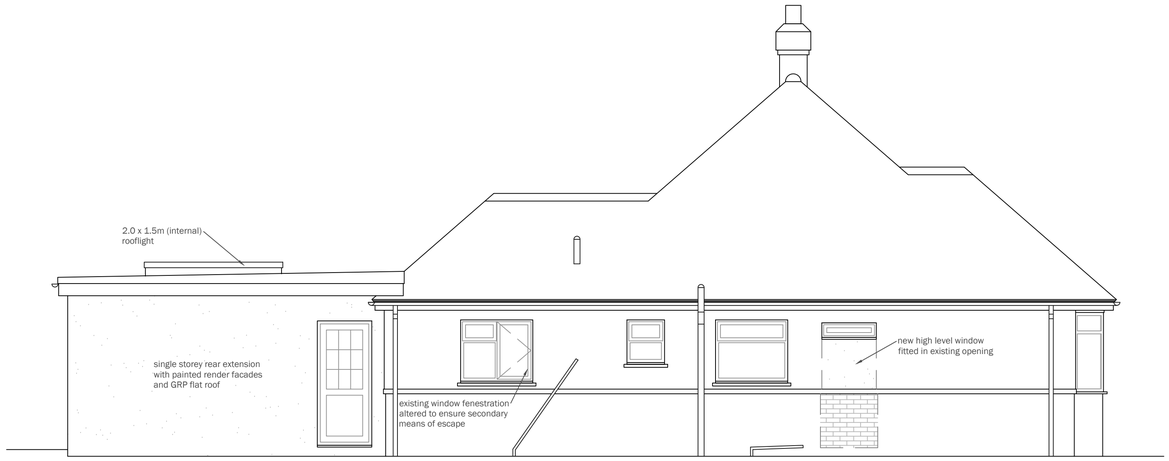

Side elevation (North)

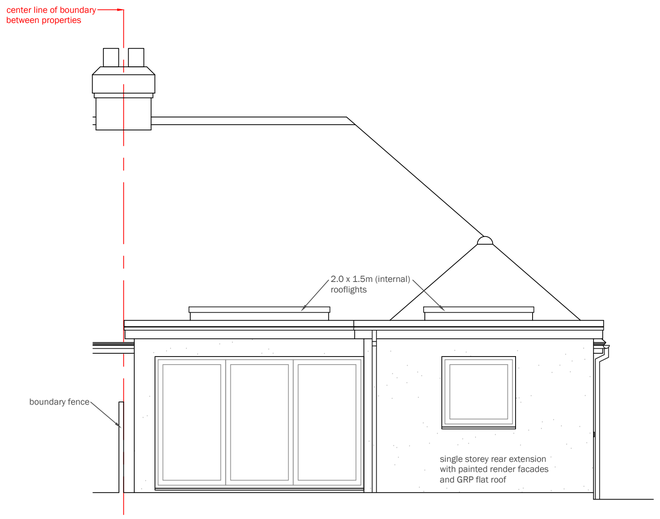

Rear elevation (East)

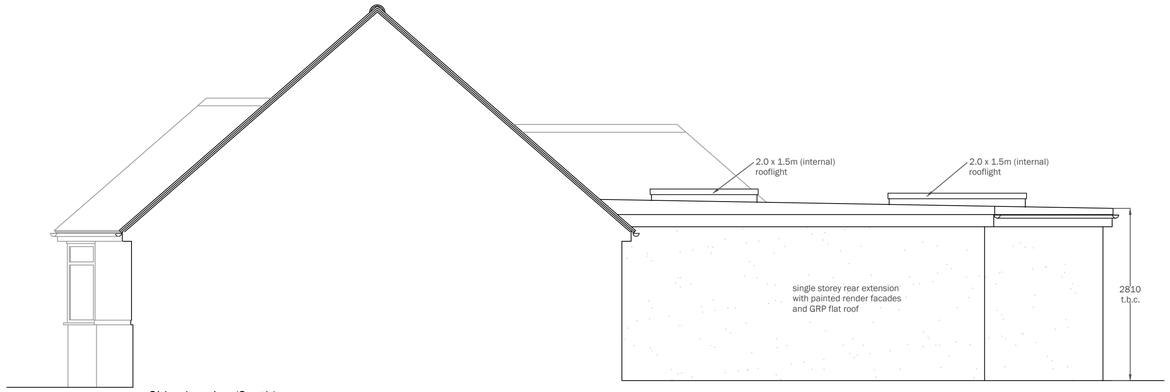

Side elevation (South)

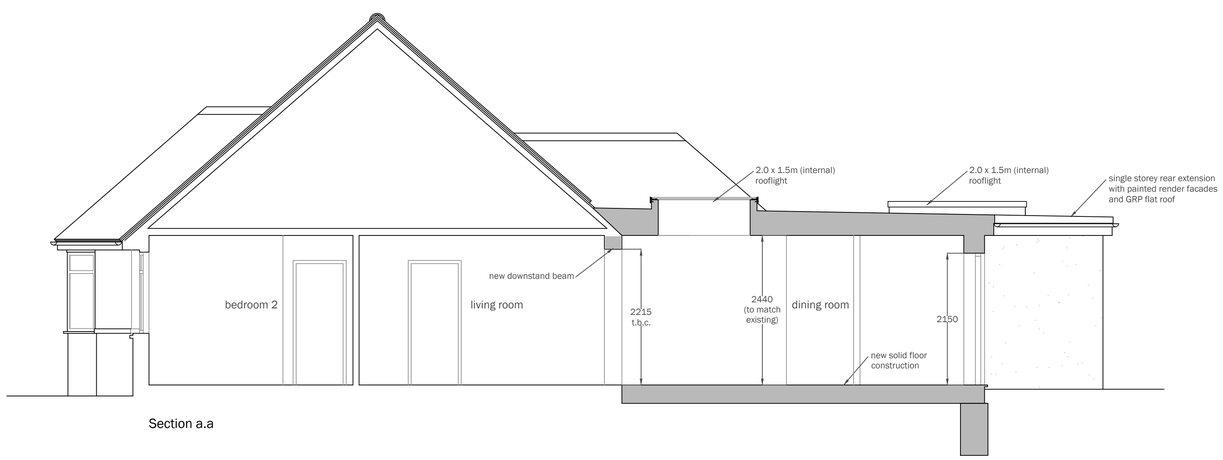

Section a.a

s c a l e b a r

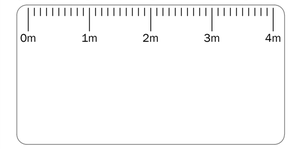

r e v i s i o n s

no.	date	description
a	14.05.25	Client alterations
b	21.05.25	Client alterations
c	11.07.25	Client alterations
d	15.07.25	Client alterations

HUNTER DAVIDSON DESIGN
• 2 Southwick Street • Southwick • BN42 4AD •
• tel: 07821 172556 •
• e-mail: mark@hunterdavidsondesign.co.uk •
• web: www.hunterdavidsondesign.co.uk •

client	Mr Chapman
job	28 Millcroft Avenue
	Southwick
	BN42 4RU
dwg no.	535.04 .d
title	Sketch Scheme 1
	Proposed Elevations
	and Section
drawn by	MD
scale	1 : 50 @ A1 / 1 : 100 @ A3
date	01.05.25

Do not scale off drawing.
Check all dimensions on site before any work commences.
All goods, materials and workmanship to conform with current
Building Regulations, Codes of Practice and British Standards.
This drawing shall not be reused, copied, or reproduced in any form
without the prior authorisation of Hunter Davidson Design.
Copyright of Hunter Davidson Design.