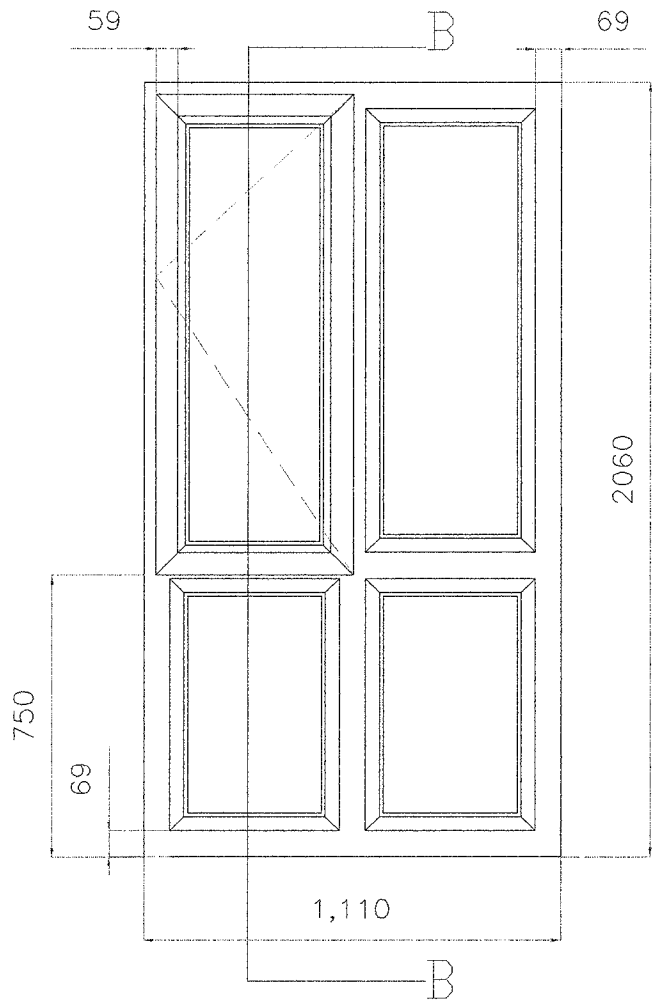

LOUNGE REAR WINDOW
1110 X 2060mm

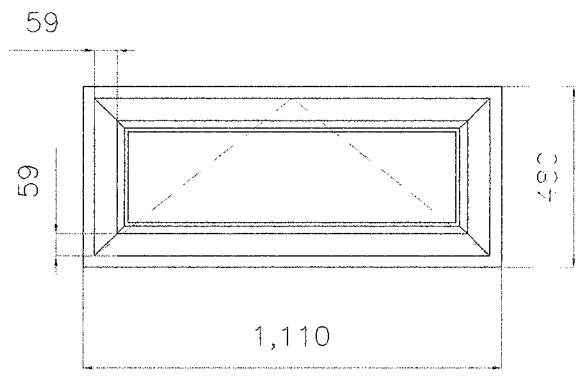

LOUNGE SIDE WINDOW
1110 X 480mm

Proposed windows 1:20

New Upvc windows to have wood grain finish to match exisiting.
New double glazed UPVC windows with trickle vents, friction stays, and lockable handles to PAS 011. All top windows to have restraints to match exisiting.
All new windows and doors to be fitted by FENSA registered company

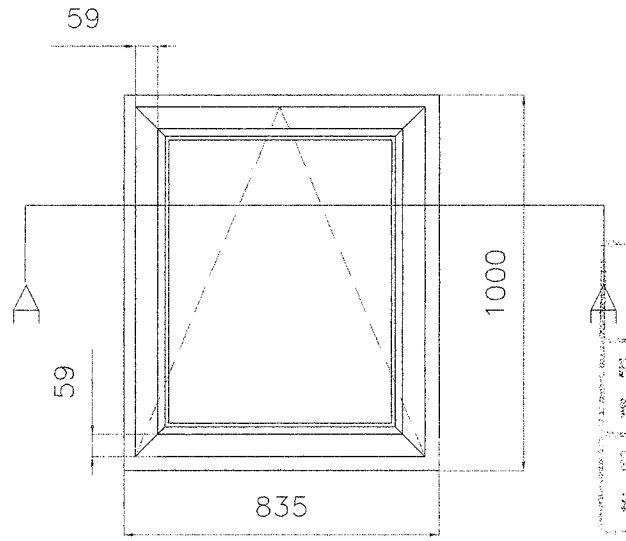

KITCHEN REAR WINDOW
835 X 1000mm

ADUR DISTRICT COUNCIL
PLANNING DIVISION
PLAN NO ADC/0089/09
DATE RECEIVED 17.04.09
AMENDED PLANS

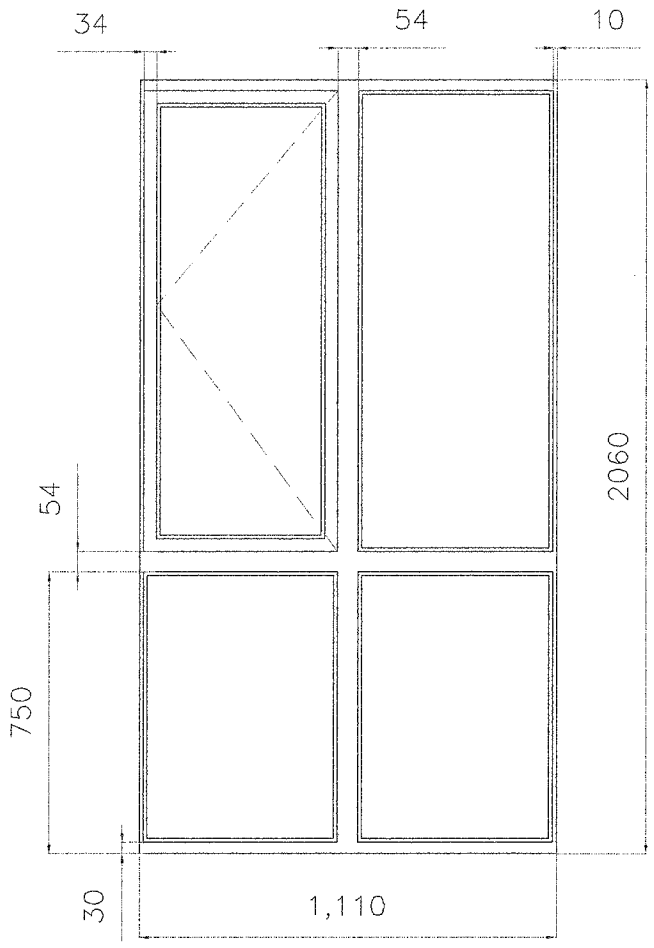

LOUNGE REAR WINDOW
1110 X 2060mm

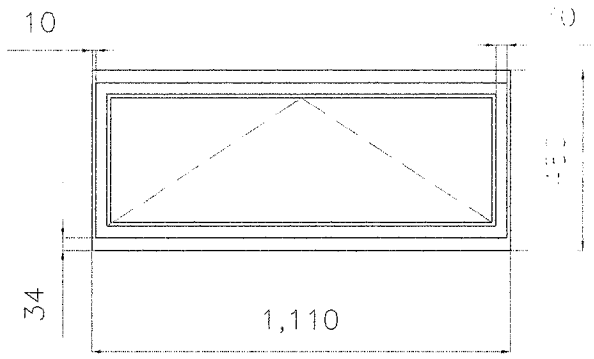

LOUNGE SIDE WINDOW
1110 X 480mm

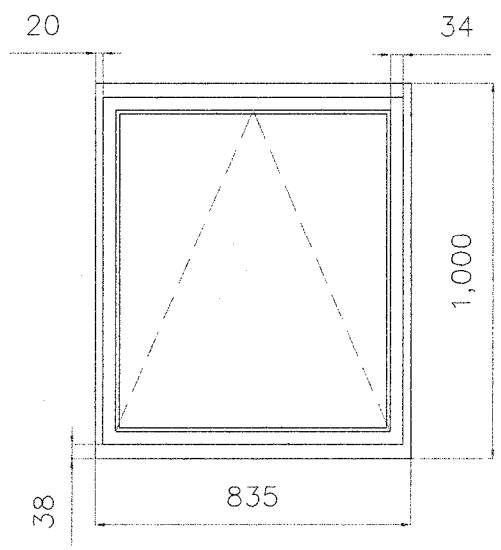

KITCHEN REAR WINDOW
835 X 1000mm

Existing windows 1:20

General Notes		
A	Ammend transom height	15.04.09
No.	Revision/Issue	Date

Firm Name and Address
SHEAR DESIGN
ARCHITECTURAL DESIGNER

Project Name and Address
Mr Moore
Flat 7
Hazelwood lodge
Penhill Road
Lancing
West Sussex
BN15 8HB

Project	Sheet
09/094	SK 1
Date 02.03.09	
Scale 1:20	