LOT	QTY
	2

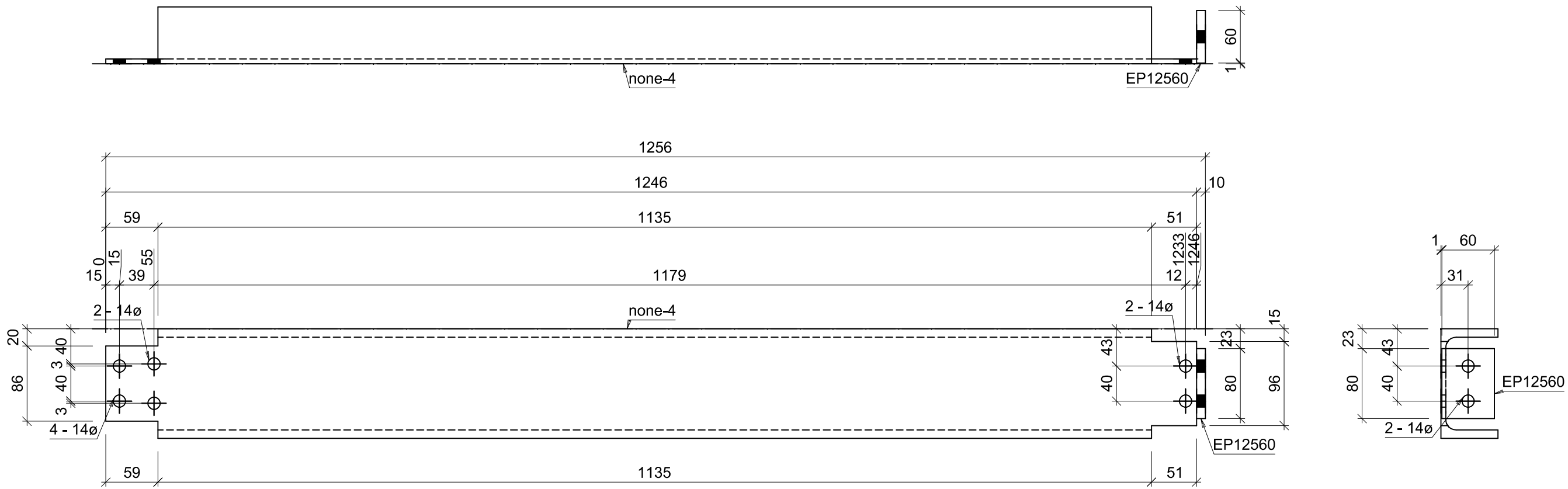

2 No. Mkd NONE1 (Coating as specified)

Mark	Quantity	Profile	Length	Material	Area (m²)	Weight (kg)
NONE1	2	Values for ONE assembly				
EP12560	1	FL60X10	80.0	S275JR	0.01	0.38
none-4	1	PFC125x65x15	1246.0	S275JR	0.62	18.39
Totals for ONE assembly					0.63	18.77

General Notes

1. All holes 22Ø U.N.O.
2. All welds continuous 6mm fillet U.N.O.
3. This drawing must not be scaled.

Index	Date	Description	Author

Autodesk®

CONTRACT

DESCRIPTION None

DRAWN BY	DATE	SCALE	JOB No.	DRG No. Rev.
	30/07/2018	1:5		[A] - NONE1 Rev0

LOT	QTY
	1

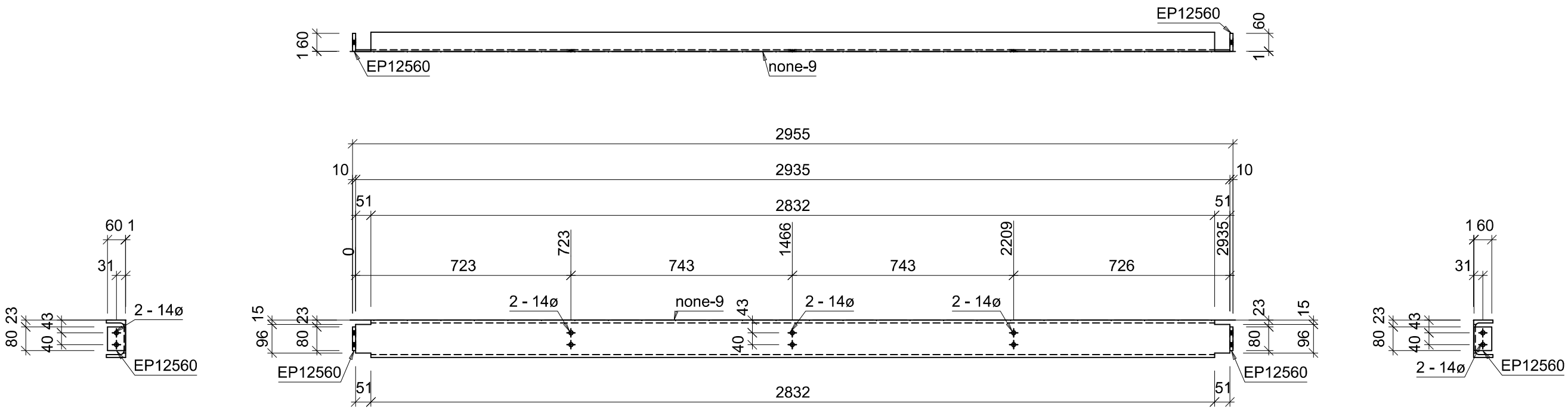

1 No. Mkd NONE2 (Coating as specified)

Mark	Quantity	Profile	Length	Material	Area (m²)	Weight (kg)
NONE2	1	Values for ONE assembly				
EP12560	2	FL60X10	80.0	S275JR	0.01	0.75
none-9	1	PFC125x65x15	2935.0	S275JR	1.46	43.31
Totals for ONE assembly					1.49	44.07

General Notes

1. All holes 22Ø U.N.O.
2. All welds continuous 6mm fillet U.N.O.
3. This drawing must not be scaled.

Index	Date	Description	Author

Autodesk®

CONTRACT	
DESCRIPTION	None

DRAWN BY	DATE	SCALE	JOB No.	DRG No.	Rev.
	30/07/2018	1:15		[A] - NONE2	Rev0

LOT	QTY
	1

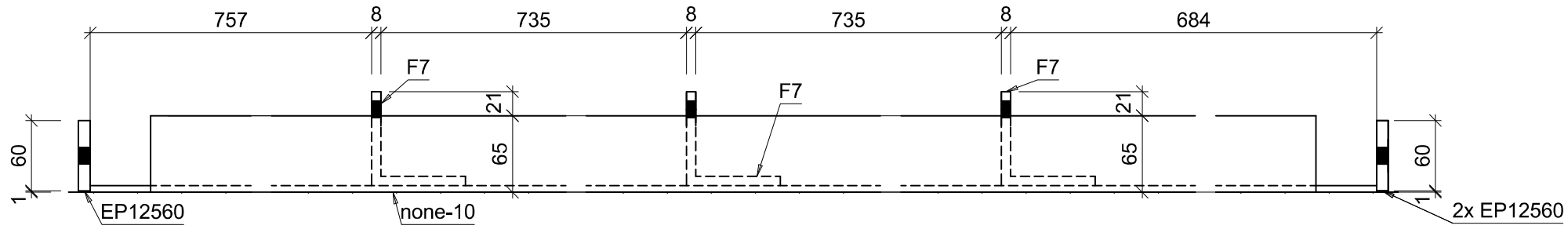

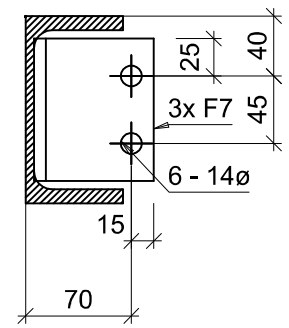

A

A - A

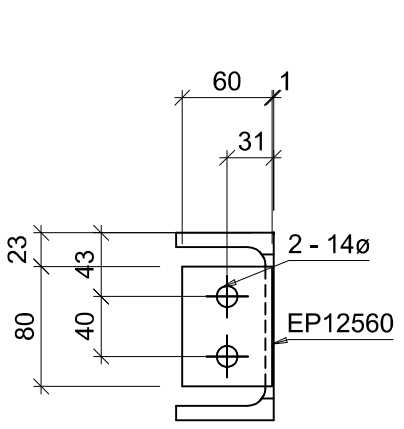

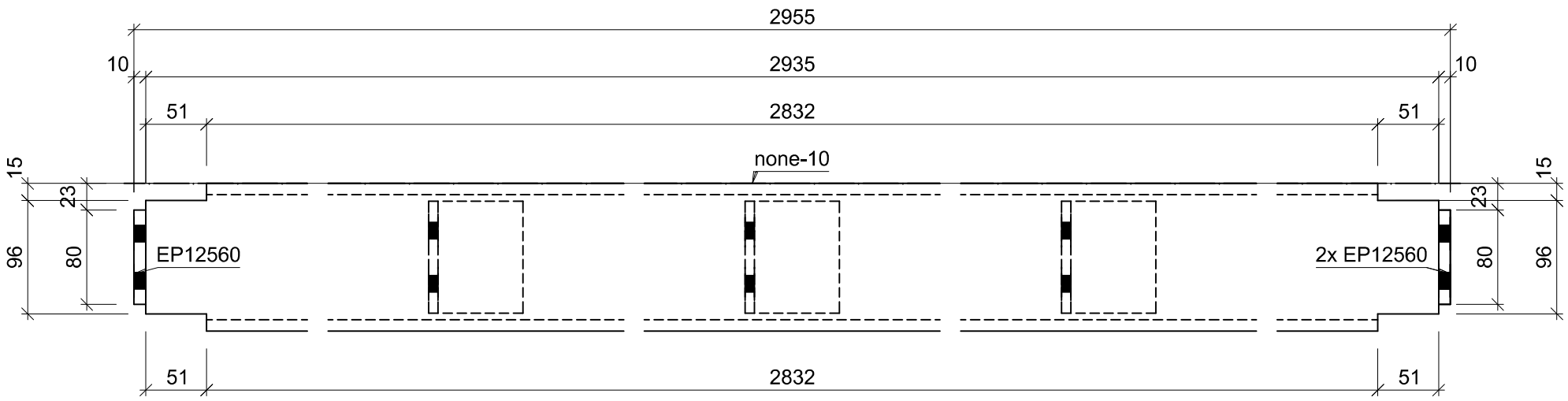

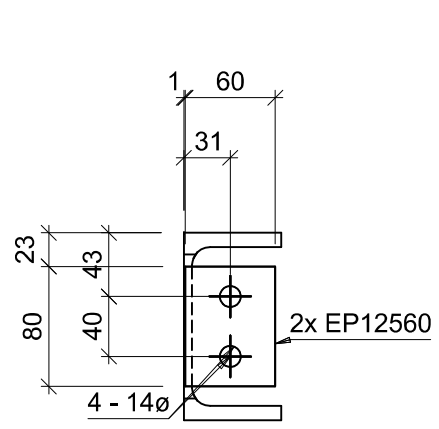

A

1 No. Mkd NONE5 (Coating as specified)

Mark	Quantity	Profile	Length	Material	Area (m²)	Weight (kg)
NONE5	1	Values for ONE assembly				
EP12560	3	FL60X10	80.0	S275JR	0.01	1.13
F7	3	RSA80x80x8	95.0	S275JR	0.03	2.75
none-10	1	PFC125x65x15	2935.0	S275JR	1.46	43.31
Totals for ONE assembly					1.59	47.20

General Notes

1. All holes 22Ø U.N.O.
2. All welds continuous 6mm fillet U.N.O.
3. This drawing must not be scaled.

Index	Date	Description	Author

Autodesk®

CONTRACT

DESCRIPTION None

DRAWN BY	DATE	SCALE	JOB No.	DRG No. Rev.
	30/07/2018	1:5		[A] - NONE5 Rev0

LOT	QTY
	1

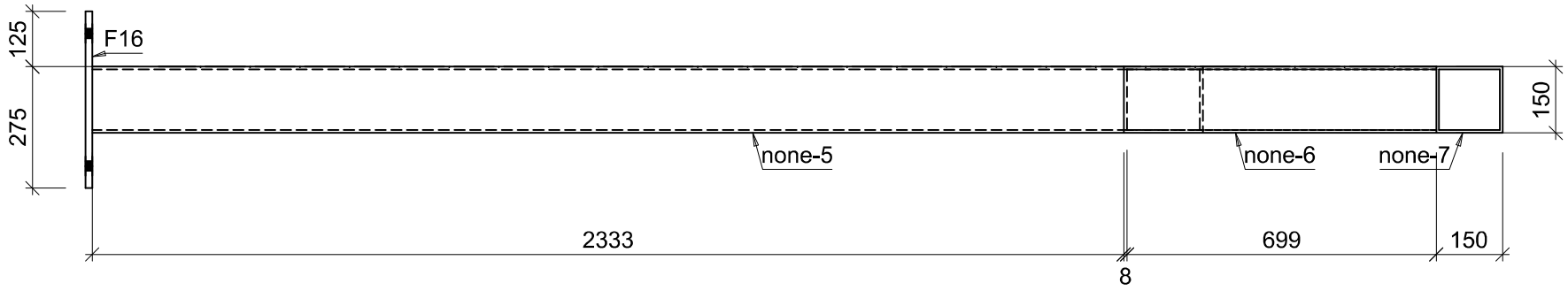

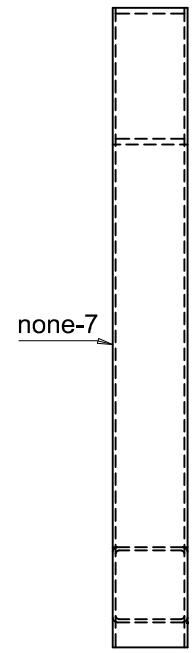

A - A

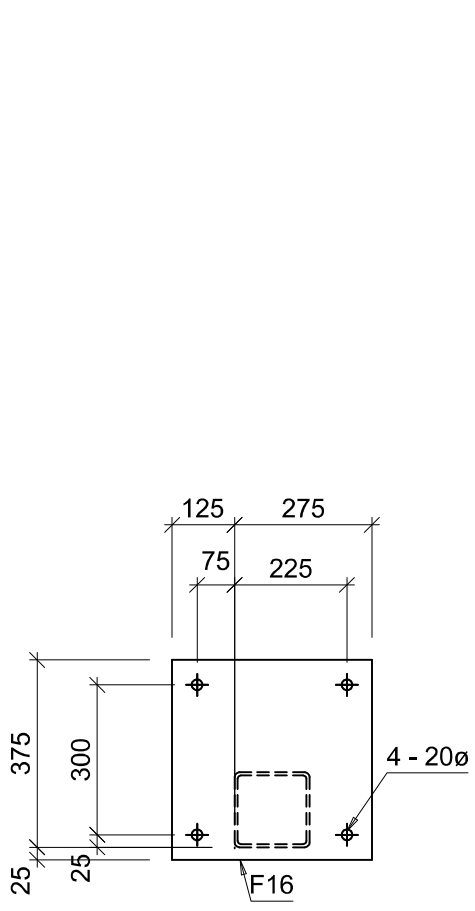

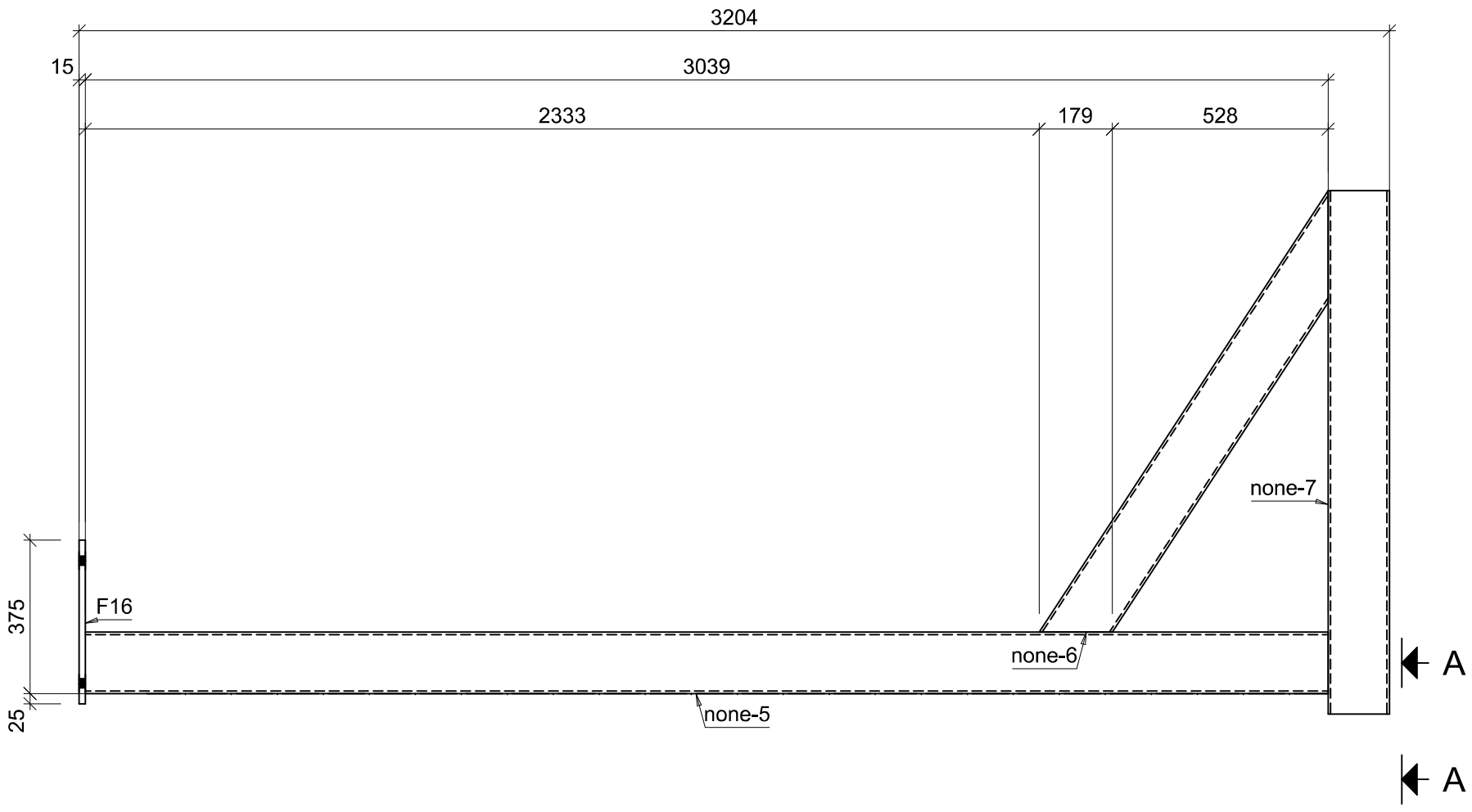

1 No. Mkd NONE6 (Coating as specified)

Mark	Quantity	Profile	Length	Material	Area (m²)	Weight (kg)
NONE6	1	Values for ONE assembly				
F16	1	FL400X15	400.0	S275JR	0.34	18.84
none-5	1	SHS150X6,3	3039.5	S275JR	1.82	85.42
none-6	1	SHS150X6,3	1290.7	S275JR	0.77	36.27
none-7	1	SHS150X6,3	1280.0	S275JR	0.77	35.97
Totals for ONE assembly					3.71	176.50

General Notes

1. All holes 22Ø U.N.O.
2. All welds continuous 6mm fillet U.N.O.
3. This drawing must not be scaled.

Index	Date	Description	Author

Autodesk®

CONTRACT

DESCRIPTION
None

DRAWN BY	DATE	SCALE	JOB No.	DRG No. Rev.
	30/07/2018	1:15		[A] - NONE6 Rev0

LOT	QTY
	1

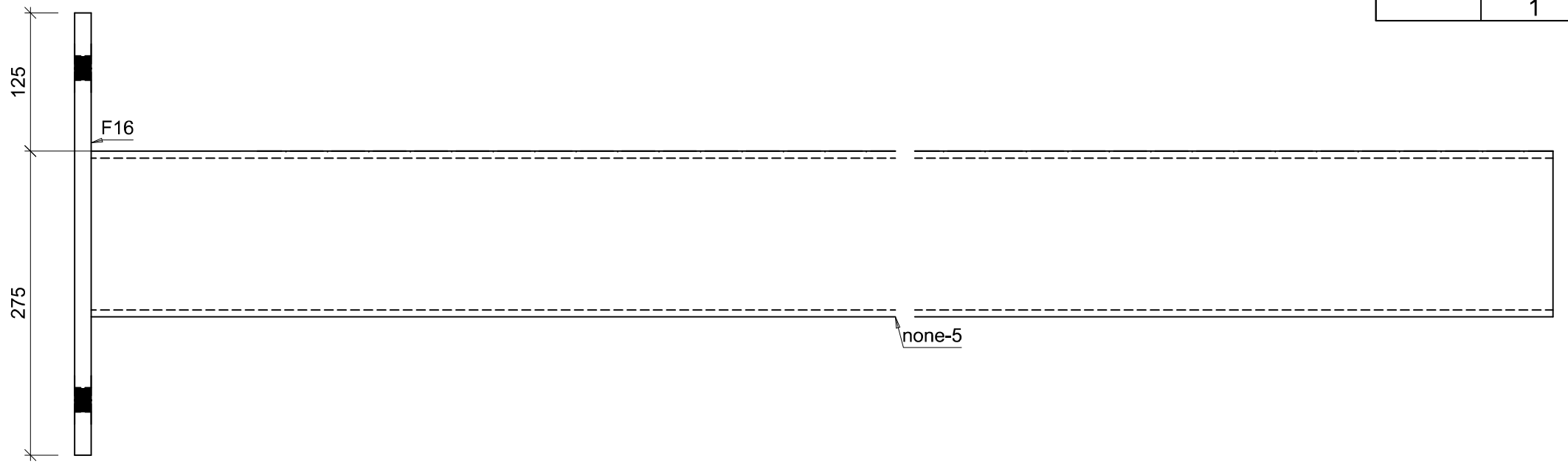

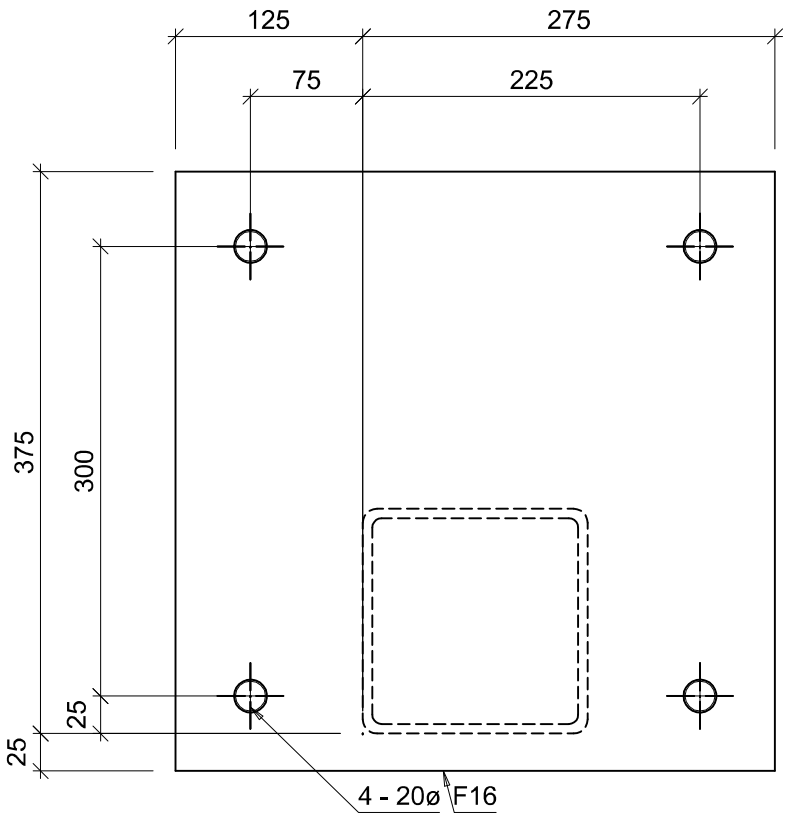

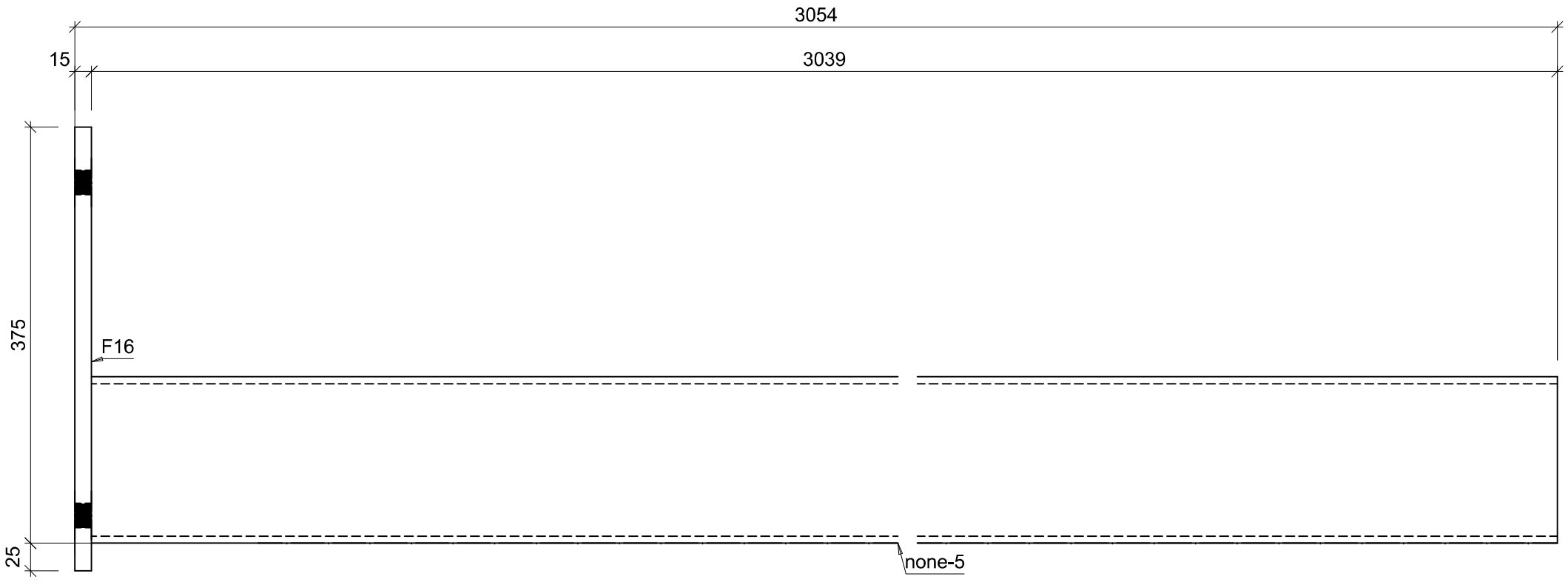

1 No. Mkd NONE7 (Coating as specified)

Mark	Quantity	Profile	Length	Material	Area (m²)	Weight (kg)
NONE7	1	Values for ONE assembly				
F16	1	FL400X15	400.0	S275JR	0.34	18.84
none-5	1	SHS150X6,3	3039.5	S275JR	1.82	85.42
Totals for ONE assembly					2.17	104.26

General Notes

1. All holes 22Ø U.N.O.
2. All welds continuous 6mm fillet U.N.O.
3. This drawing must not be scaled.

Index	Date	Description	Author

Autodesk®

CONTRACT

DESCRIPTION None

DRAWN BY	DATE	SCALE	JOB No.	DRG No. Rev.
	30/07/2018	1:5		[A] - NONE7 Rev0

LOT	QTY
	1

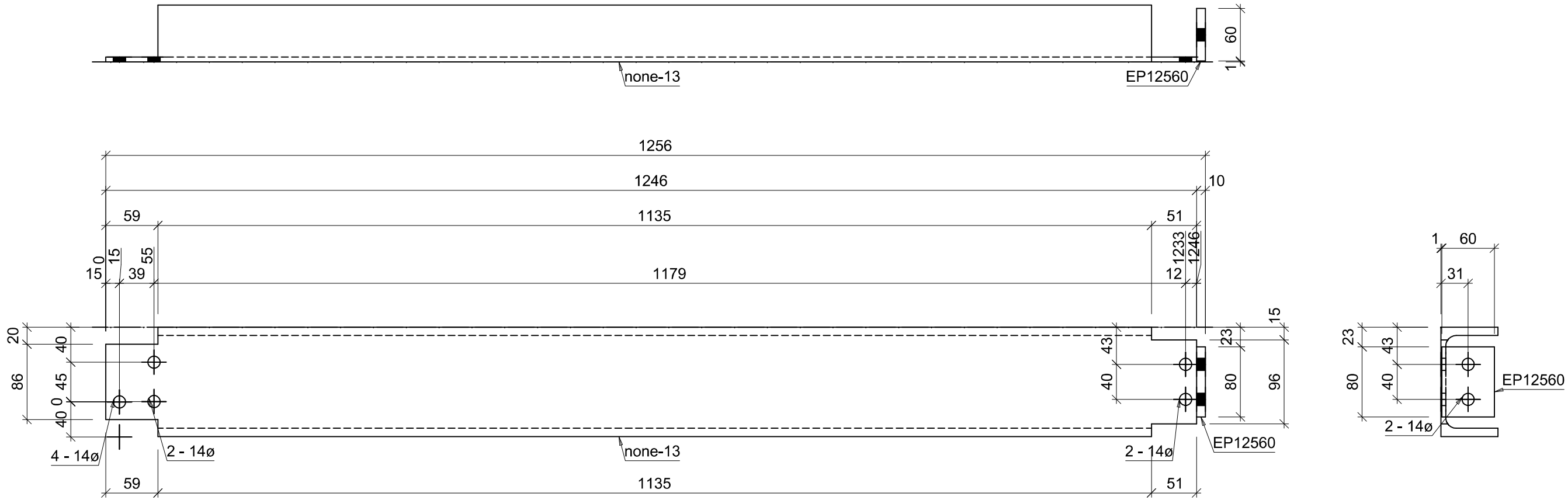

1 No. Mkd NONE10 (Coating as specified)

Mark	Quantity	Profile	Length	Material	Area (m²)	Weight (kg)
NONE10	1	Values for ONE assembly				
EP12560	1	FL60X10	80.0	S275JR	0.01	0.38
none-13	1	UKPFC125x65x15	1246.0	S275JR	0.61	18.44
Totals for ONE assembly					0.62	18.82

General Notes

1. All holes 22Ø U.N.O.
2. All welds continuous 6mm fillet U.N.O.
3. This drawing must not be scaled.

Index	Date	Description	Author

Autodesk®

DRAWN BY	DATE	SCALE	JOB No.	DRG No.	Rev.
	30/07/2018	1:5		[A] - NONE10	Rev0

CONTRACT

DESCRIPTION
None

LOT	QTY
	1

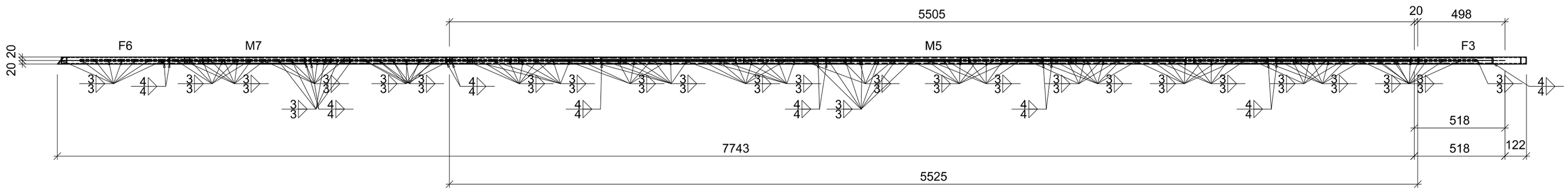

1 No. Mkd RL1 (Coating as specified)

Mark	Quantity	Profile	Length	Material	Area (m²)	Weight (kg)
RL1	1	Values for ONE assembly				
F1	48	RD12	816.2	S275JR	0.03	34.78
F2	25	RD12	1010.0	S275JR	0.04	22.42
F3	5	SHS40X3	1091.3	S275JR	0.17	18.59
F4	4	FL30X10	1242.2	S275JR	0.10	11.70
F6	3	SHS40X3	1220.0	S275JR	0.20	12.47
F8	2	FL30X10	946.1	S275JR	0.08	4.46
F10	1	FL30X10	987.7	S275JR	0.08	2.33
F11	1	FL30X10	15.0	S275JR	0.00	0.04
F12	1	FL30X10	-20.0	S275JR	-0.00	-0.00000000000000000.00
F13	1	RD12	949.9	S275JR	0.04	0.84
F14	1	RD12	879.9	S275JR	0.03	0.78
M7	1	FL40X10	2735.7	S275JR	0.27	8.59
M5	1	FL40X10	5525.3	S275JR	0.55	17.35
Totals for ONE assembly					-470999999999999870.00	

General Notes

1. All holes 22Ø U.N.O.
2. All welds continuous 6mm fillet U.N.O.
3. This drawing must not be scaled.

Index	Date	Description	Author

Autodesk®

CONTRACT

DESCRIPTION Railing Handrail Stair

DRAWN BY	DATE	SCALE	JOB No.	DRG No.	Rev.
	30/07/2018	1:20		[A] - RL1	Rev0

LOT	QTY
	1

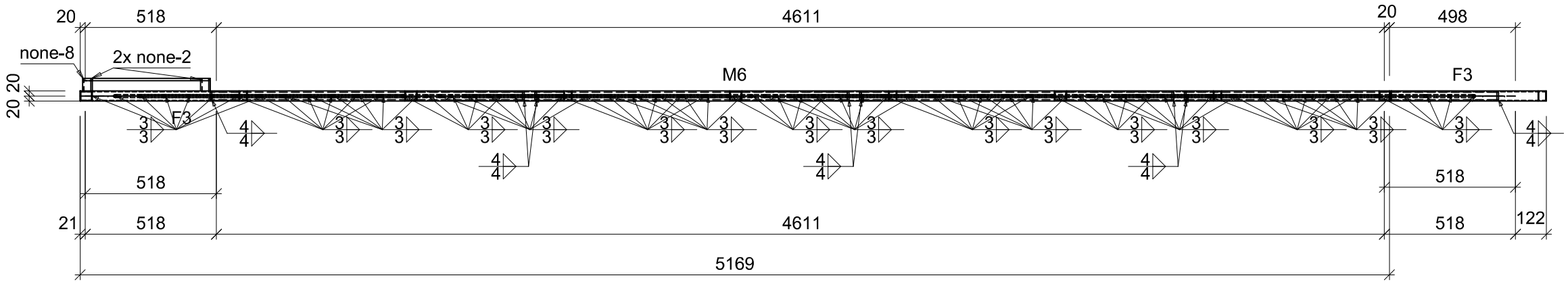

1 No. Mkd RL2 (Coating as specified)

Mark	Quantity	Profile	Length	Material	Area (m²)	Weight (kg)
RL2	1	Values for ONE assembly				
F1	48	RD12	816.2	S275JR	0.03	34.78
F3	5	SHS40X3	1091.3	S275JR	0.17	18.59
F5	4	FL30X10	1240.4	S275JR	0.10	11.68
M6	1	FL40X10	5169.0	S275JR	0.52	16.23
none-2	2	FL40X10	50.0	S275JR	0.01	0.31
none-8	1	FL40X10	800.0	S275JR	0.08	2.51
Totals for ONE assembly					3.35	84.11

General Notes

1. All holes 22Ø U.N.O.
2. All welds continuous 6mm fillet U.N.O.
3. This drawing must not be scaled.

Index	Date	Description	Author

Autodesk®

CONTRACT

DESCRIPTION
Railing Handrail Stair

DRAWN BY	DATE	SCALE	JOB No.	DRG No.	Rev.
	30/07/2018	1:20		[A] - RL2	Rev0

LOT	QTY
	1

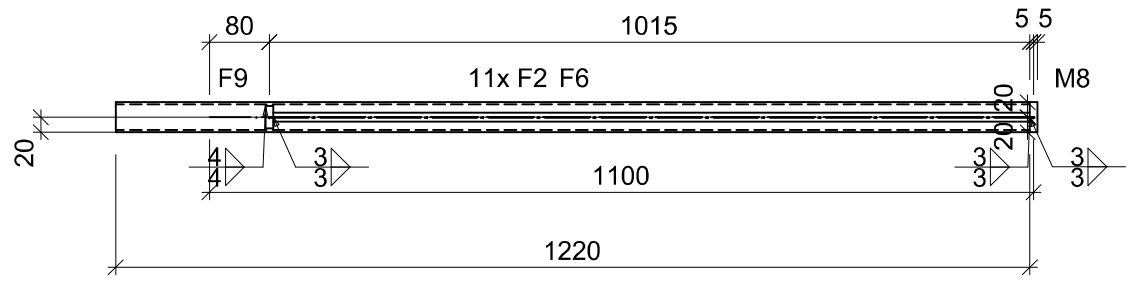

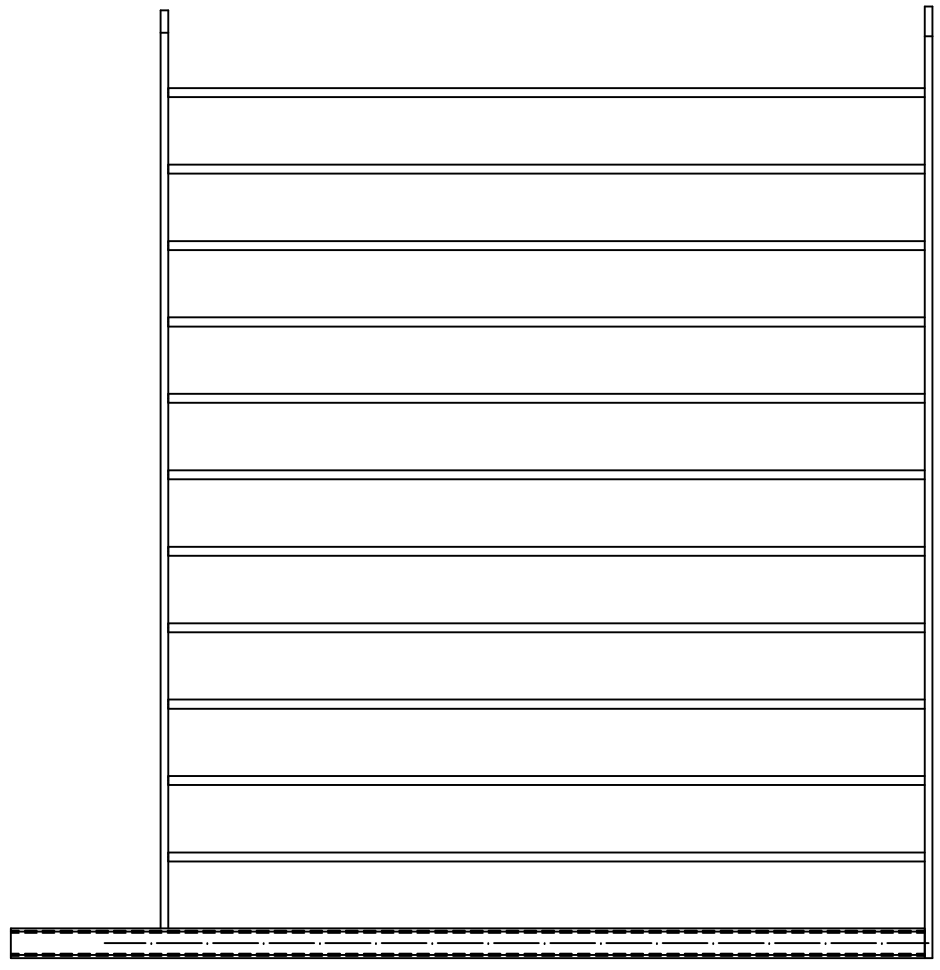

1 No. Mkd RL3 (Coating as specified)

Mark	Quantity	Profile	Length	Material	Area (m²)	Weight (kg)
RL3	1	Values for ONE assembly				
F2	11	RD12	1010.0	S275JR	0.04	9.86
F9	1	FL30X10	1225.0	S275JR	0.10	2.88
M8	1	FL40X10	1270.0	S275JR	0.13	3.99
F6	1	SHS40X3	1220.0	S275JR	0.20	4.16
Totals for ONE assembly					0.84	20.89

General Notes

1. All holes 22Ø U.N.O.
2. All welds continuous 6mm fillet U.N.O.
3. This drawing must not be scaled.

Index	Date	Description	Author

Autodesk®

CONTRACT

DESCRIPTION
Railing Post Landing

DRAWN BY	DATE	SCALE	JOB No.	DRG No.	Rev.
	30/07/2018	1:10		[A] - RL3	Rev0

LOT	QTY
	1

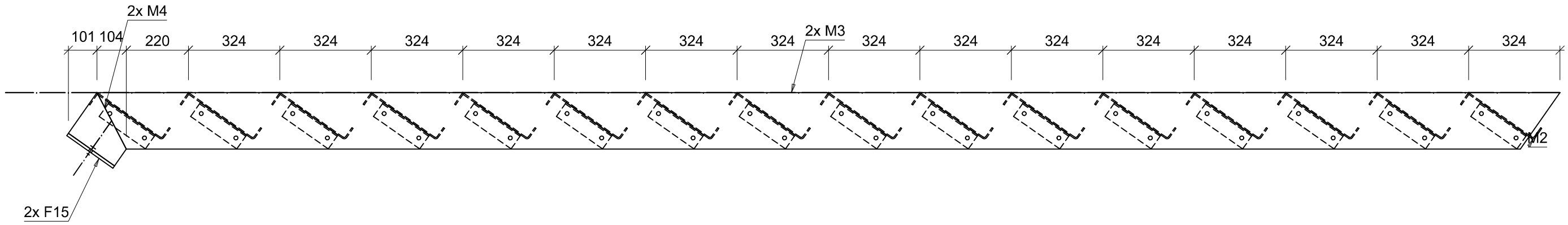

1 No. Mkd SG1 (Coating as specified)

Mark	Quantity	Profile	Length	Material	Area (m²)	Weight (kg)
SG1	1	Values for ONE assembly				
F15	2	FL50X10	200.0	S275JR	0.03	1.57
M1	32	L60X5	200.0	S275JR	0.05	29.25
M2	16	Folded PLT4.5x1100x367.75	1100.0	S275JR	0.82	230.49
M4	2	FL200X10	176.4	S275JR	0.07	5.54
M3	2	FL200X10	5184.0	S275JR	2.18	162.78
Totals for ONE assembly					19.20	429.63

General Notes

1. All holes 22Ø U.N.O.
2. All welds continuous 6mm fillet U.N.O.
3. This drawing must not be scaled.

Index	Date	Description	Author

Autodesk®

CONTRACT				
DESCRIPTION: Stringer				
DRAWN BY	DATE: 30/07/2018	SCALE: 1:15	JOB No.	DRG No. [A] - SG1 Rev. Rev0

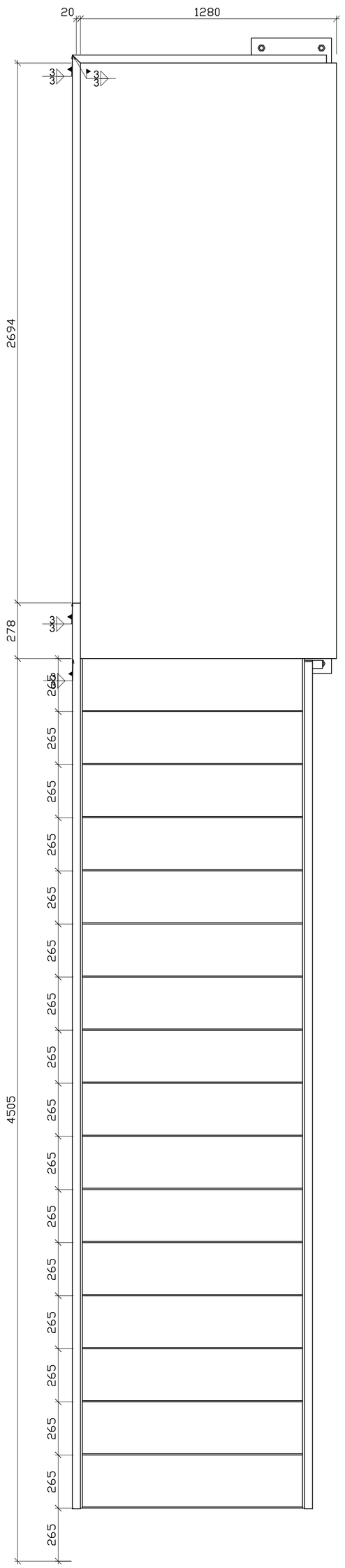

Plan View

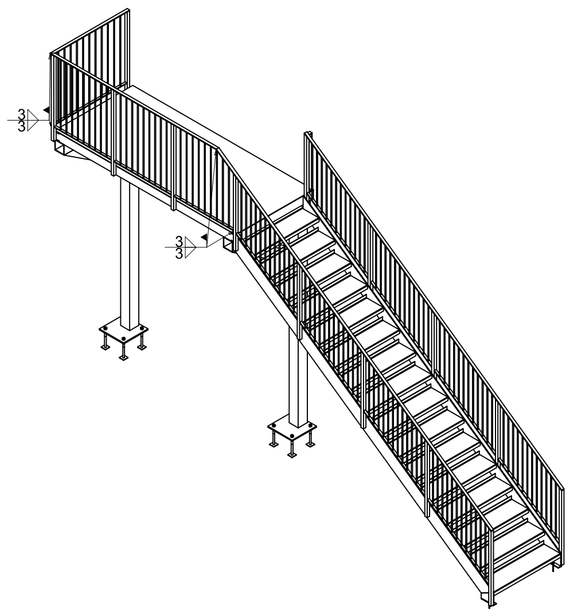

Iso View View

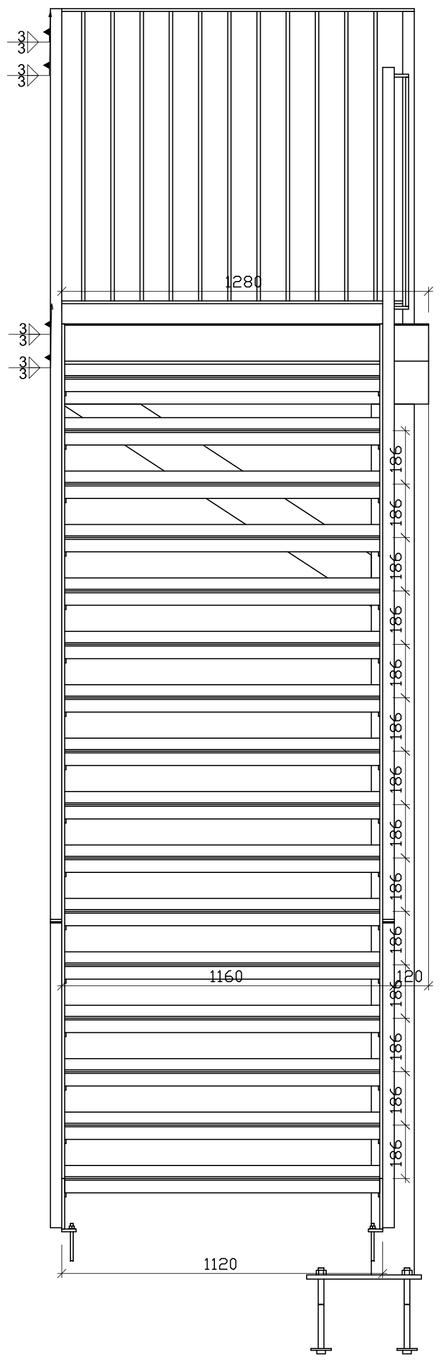

End View View

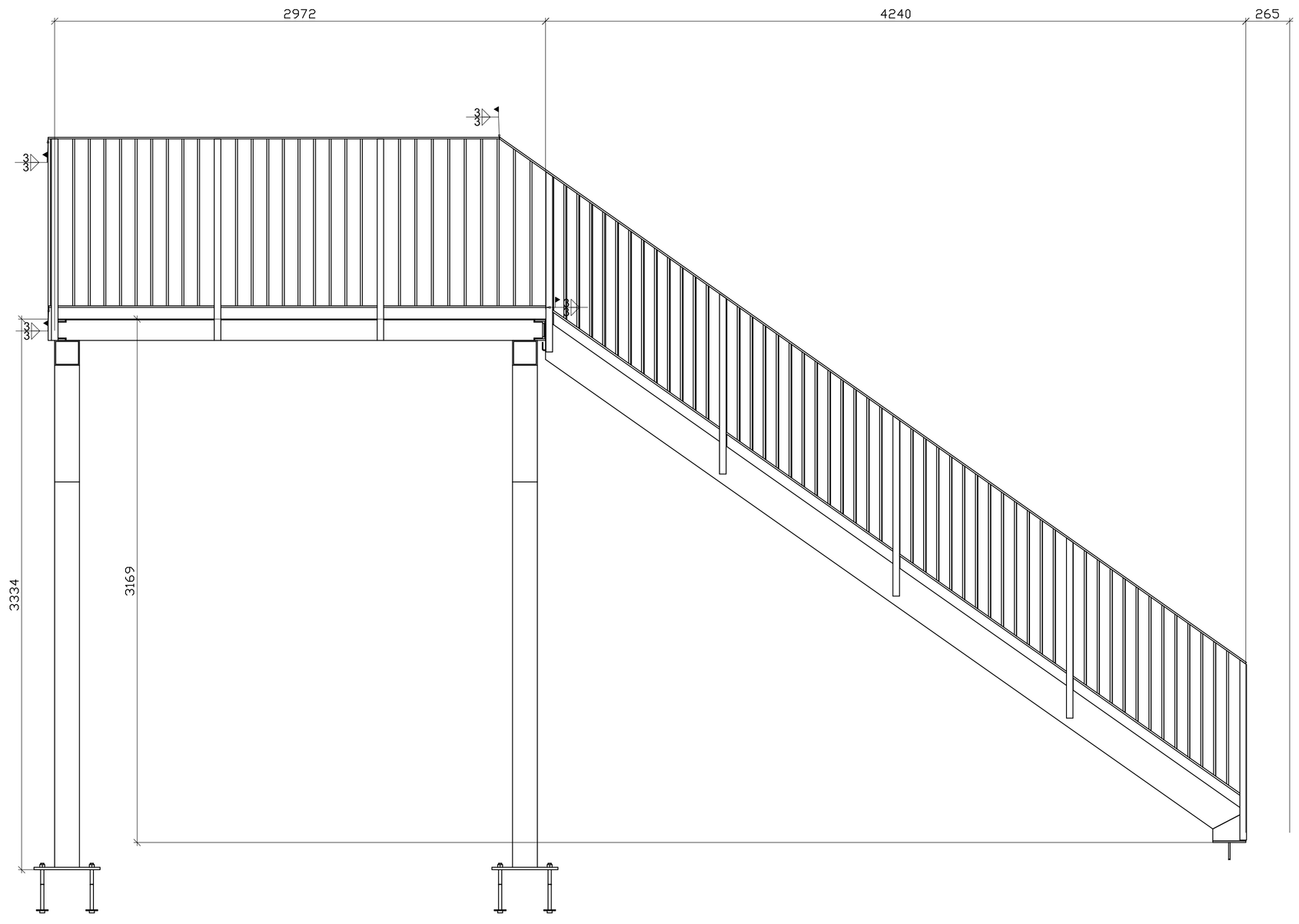

Side Elevation View

General Notes

1. This drawing must not be scaled.

Index	Date	Description	Author

REVISIONS

Autodesk®

CLIENT			
PROJECT			
DRAWING TITLE			
DRAWN BY	CHECKED BY	DATE: 30/07/2018	SCALE: As Noted
PROJECT No.	DRAWING No.: [G]- 100		REV: Rev0

Mark	Quantity	Profile	Length	Material	Area (m²)	Weight
EP12560	8	FL60X10	80	S275JR	0.01	0.38
						3.01

LOT	QTY
	8

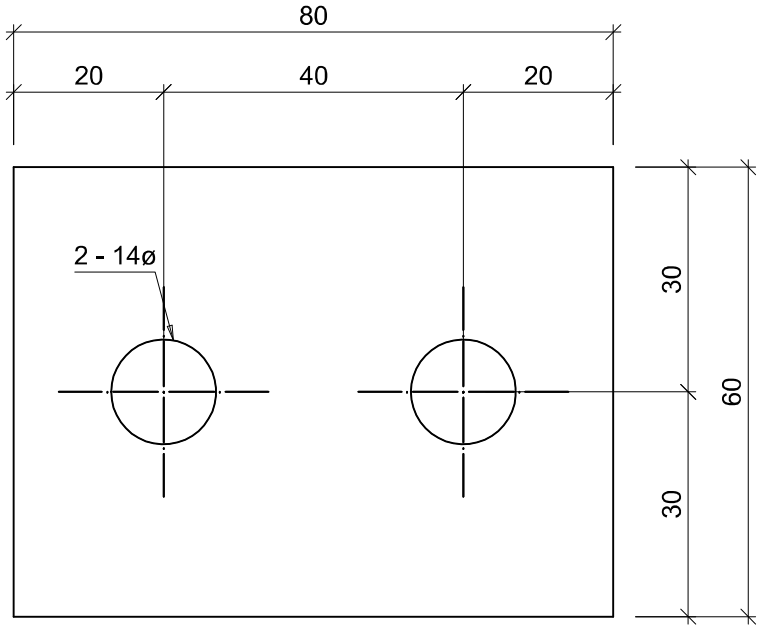

8 No. FL60X10 - Mkd EP12560

Index	Date	Description	Author

General Notes

1. All holes 22Ø U.N.O.
2. This drawing must not be scaled.

Autodesk®

DRAWN BY	DATE	SCALE	JOB No.	DRG No.	Rev.
	30/07/2018	1:1		[S] - EP12560	Rev0

CONTRACT

DESCRIPTION
End Plate

Mark	Quantity	Profile	Length	Material	Area (m²)	Weight
F1	96	RD12	816	S275JR	0.03	0.72
						69.57

LOT	QTY
	96

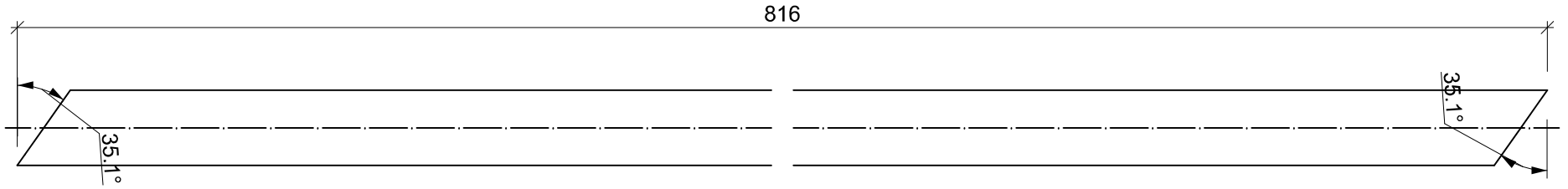

96 No. RD12 - Mkd F1

Index	Date	Description	Author

General Notes

1. All holes 22Ø U.N.O.
2. This drawing must not be scaled.

Autodesk®

DRAWN BY	DATE	SCALE	JOB No.	DRG No.	Rev.
	30/07/2018	1:1		[S] - F1	Rev0

CONTRACT

DESCRIPTION
Railing Baluster Stair

Mark	Quantity	Profile	Length	Material	Area (m²)	Weight
F2	36	RD12	1010	S275JR	0.04	0.90
						32.28

LOT	QTY
	36

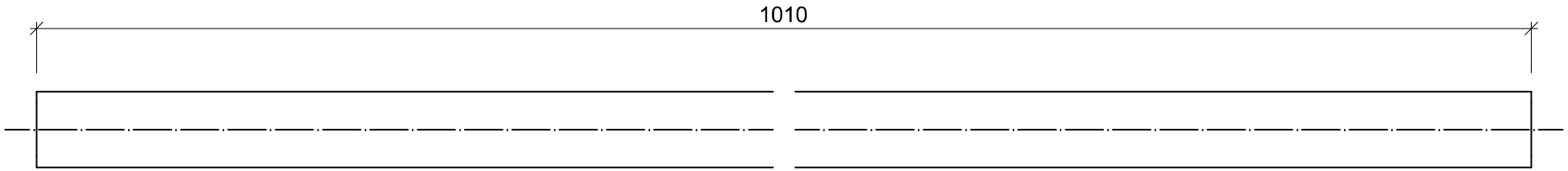

36 No. RD12 - Mkd F2

Index	Date	Description	Author

General Notes

1. All holes 22Ø U.N.O.
2. This drawing must not be scaled.

Autodesk®

DRAWN BY	DATE	SCALE
	30/07/2018	1:1

CONTRACT

DESCRIPTION
Railing Baluster Landing

JOB No.	DRG No.	Rev.
	[S] - F2	Rev0

Mark	Quantity	Profile	Length	Material	Area (m²)	Weight
F3	10	SHS40X3	1091	S275JR	0.17	3.72
						37.18

LOT	QTY
	10

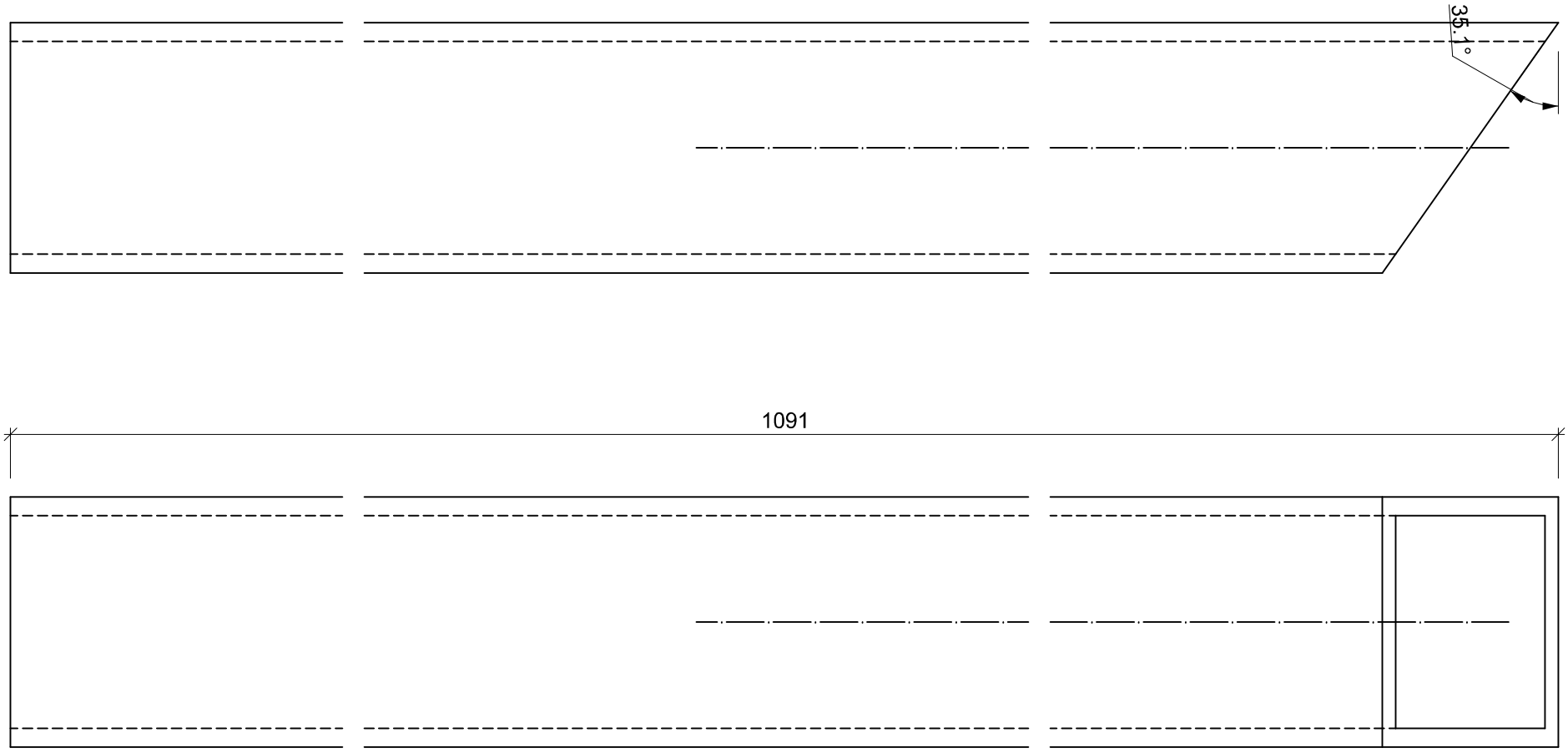

10 No. SHS40X3 - Mkd F3

Index	Date	Description	Author

General Notes

1. All holes 22Ø U.N.O.
2. This drawing must not be scaled.

Autodesk®

DRAWN BY	DATE	SCALE	JOB No.	DRG No.	Rev.
	30/07/2018	1:1		[S] - F3	Rev0

CONTRACT

DESCRIPTION
Railing Post Stair

Mark	Quantity	Profile	Length	Material	Area (m²)	Weight
F4	4	FL30X10	1242	S275JR	0.10	2.93
						11.70

LOT	QTY
	4

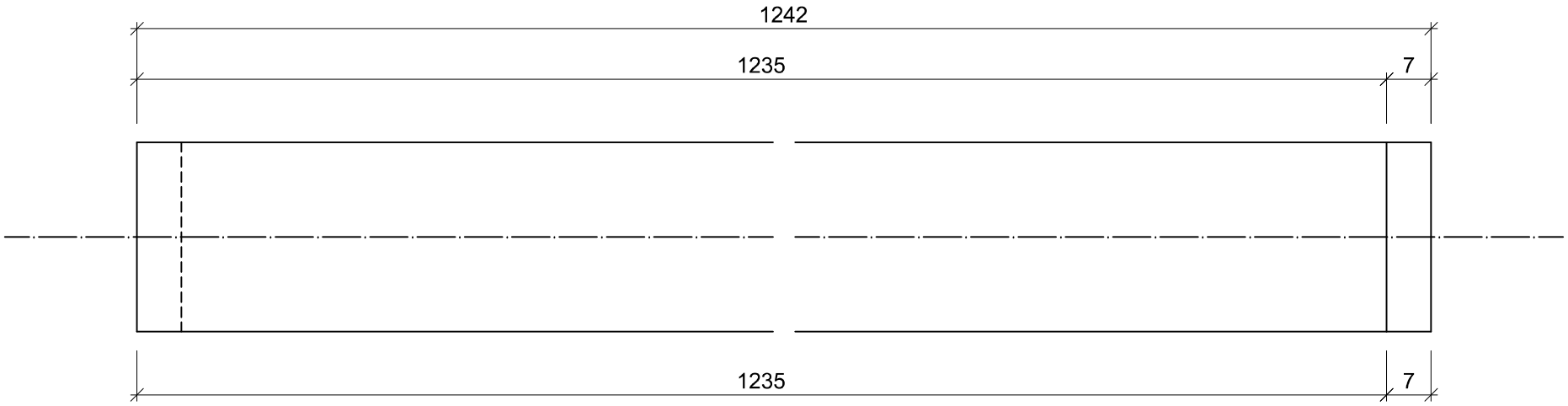

4 No. FL30X10 - Mkd F4

Index	Date	Description	Author

General Notes

1. All holes 22Ø U.N.O.
2. This drawing must not be scaled.

Autodesk®

DRAWN BY	DATE	SCALE	JOB No.	DRG No.	Rev.
	30/07/2018	1:1		[S] - F4	Rev0

CONTRACT

DESCRIPTION
Railing Kneerail Stair

Mark	Quantity	Profile	Length	Material	Area (m²)	Weight
F5	4	FL30X10	1240	S275JR	0.10	2.92
						11.68

LOT	QTY
	4

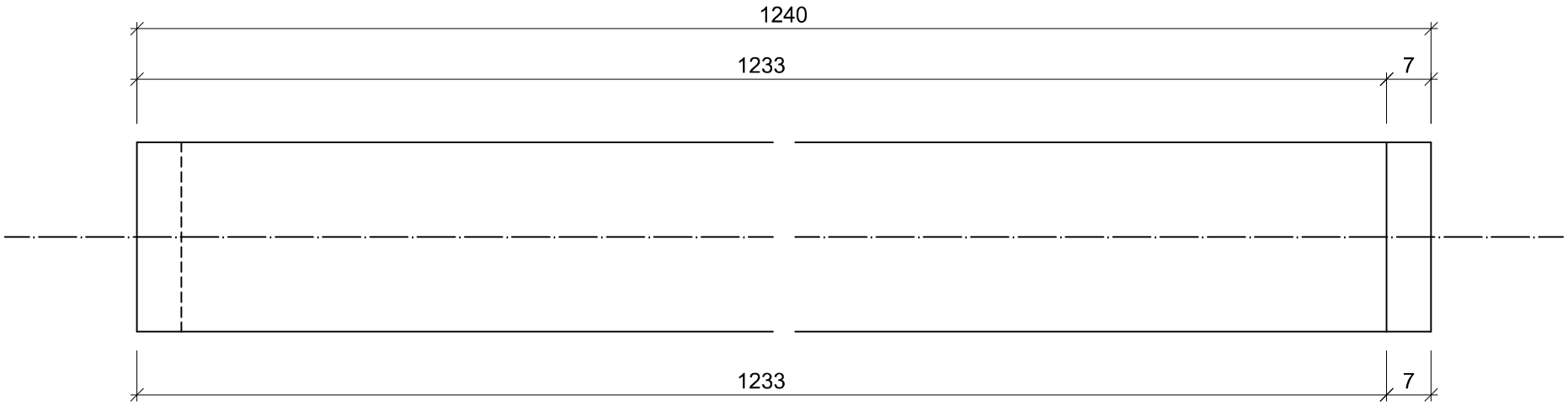

4 No. FL30X10 - Mkd F5

Index	Date	Description	Author

General Notes

1. All holes 22Ø U.N.O.
2. This drawing must not be scaled.

Autodesk®

DRAWN BY	DATE	SCALE	JOB No.	DRG No.	Rev.
	30/07/2018	1:1		[S] - F5	Rev0

CONTRACT

DESCRIPTION
Railing Kneerail Stair

Mark	Quantity	Profile	Length	Material	Area (m²)	Weight
F6	4	SHS40X3	1220	S275JR	0.20	4.16
						16.63

LOT	QTY
	4

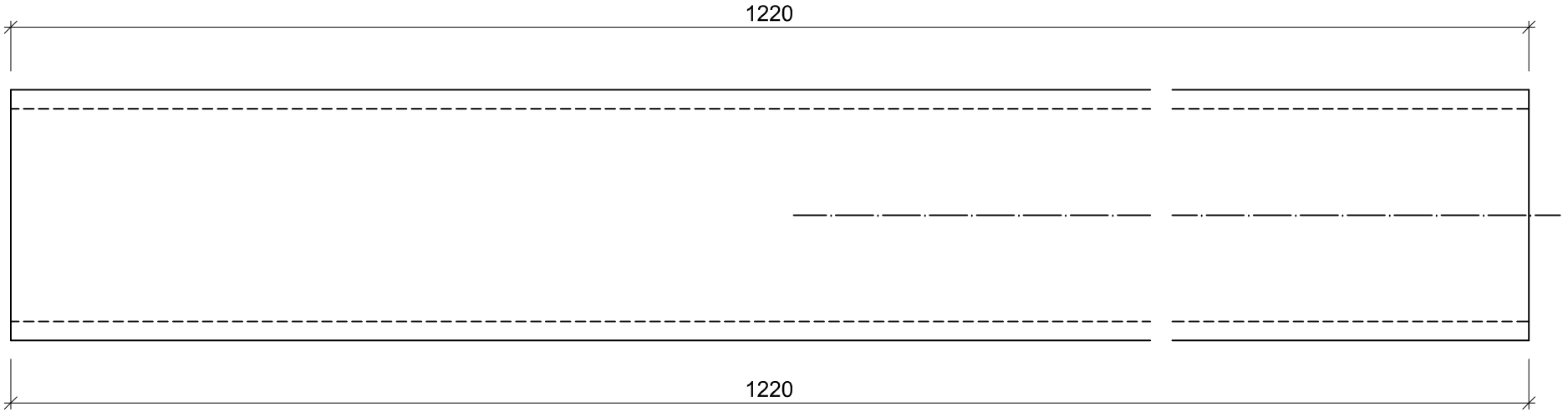

4 No. SHS40X3 - Mkd F6

Index	Date	Description	Author

General Notes

1. All holes 22Ø U.N.O.
2. This drawing must not be scaled.

Autodesk®

DRAWN BY	DATE	SCALE	JOB No.	DRG No.	Rev.
	30/07/2018	1:1		[S] - F6	Rev0

CONTRACT

DESCRIPTION
Railing Post Landing

Mark	Quantity	Profile	Length	Material	Area (m²)	Weight
F7	3	RSA80x80x8	95	S275JR	0.03	0.92
						2.75

LOT	QTY
	3

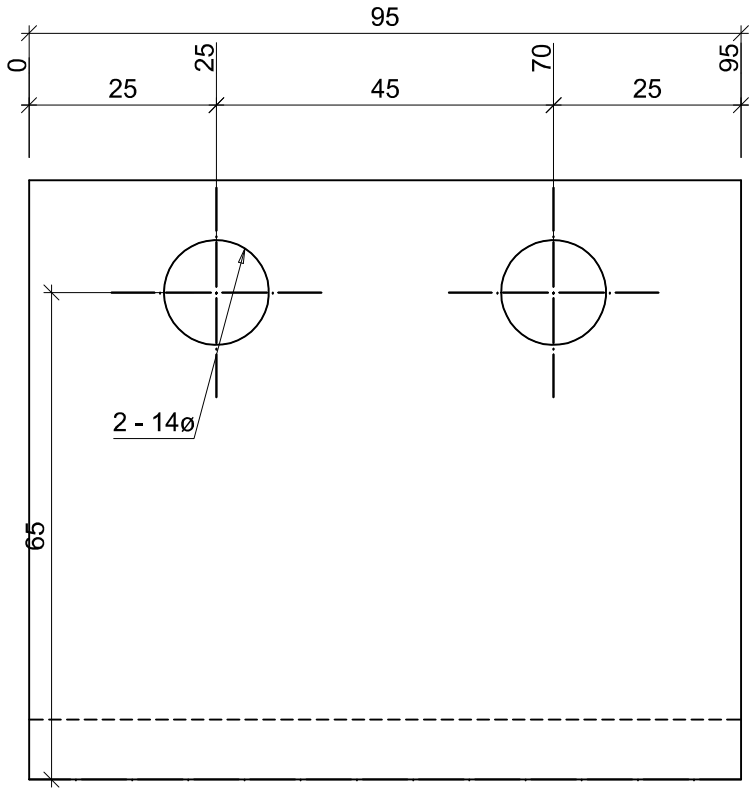

3 No. RSA80x80x8 - Mkd F7

Index	Date	Description	Author

General Notes

1. All holes 22Ø U.N.O.
2. This drawing must not be scaled.

Autodesk®

DRAWN BY	DATE	SCALE	JOB No.	DRG No.	Rev.
	30/07/2018	1:1		[S] - F7	Rev0

CONTRACT

DESCRIPTION
Angle Cleat

Mark	Quantity	Profile	Length	Material	Area (m²)	Weight
F8	2	FL30X10	946	S275JR	0.08	2.23
						4.46

LOT	QTY
	2

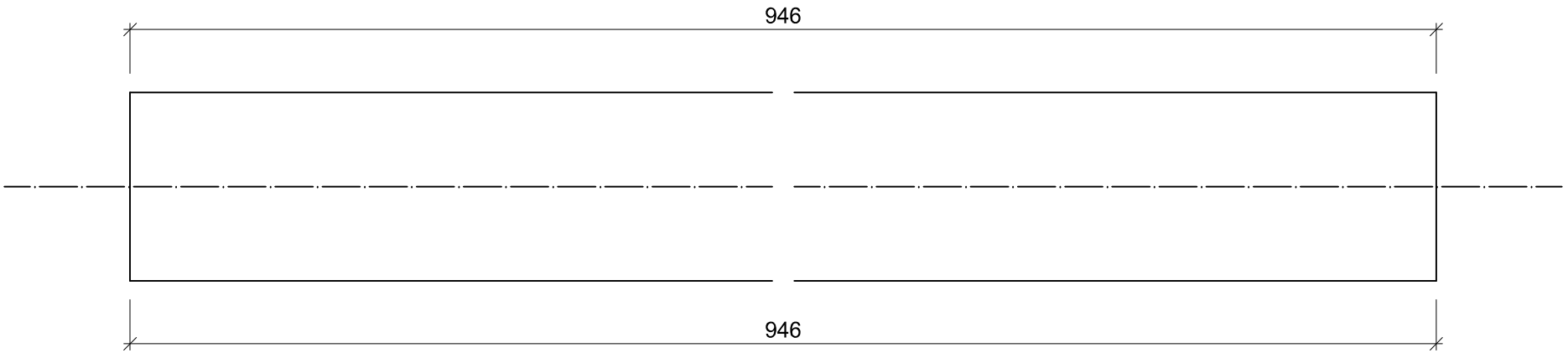

2 No. FL30X10 - Mkd F8

Index	Date	Description	Author

General Notes

1. All holes 22Ø U.N.O.
2. This drawing must not be scaled.

Autodesk®

DRAWN BY	DATE	SCALE
	30/07/2018	1:1

CONTRACT

DESCRIPTION
Railing Kneerail Landing

JOB No.	DRG No.	Rev.
	[S] - F8	Rev0

Mark	Quantity	Profile	Length	Material	Area (m²)	Weight
F9	1	FL30X10	1225	S275JR	0.10	2.88
						2.88

LOT	QTY
	1

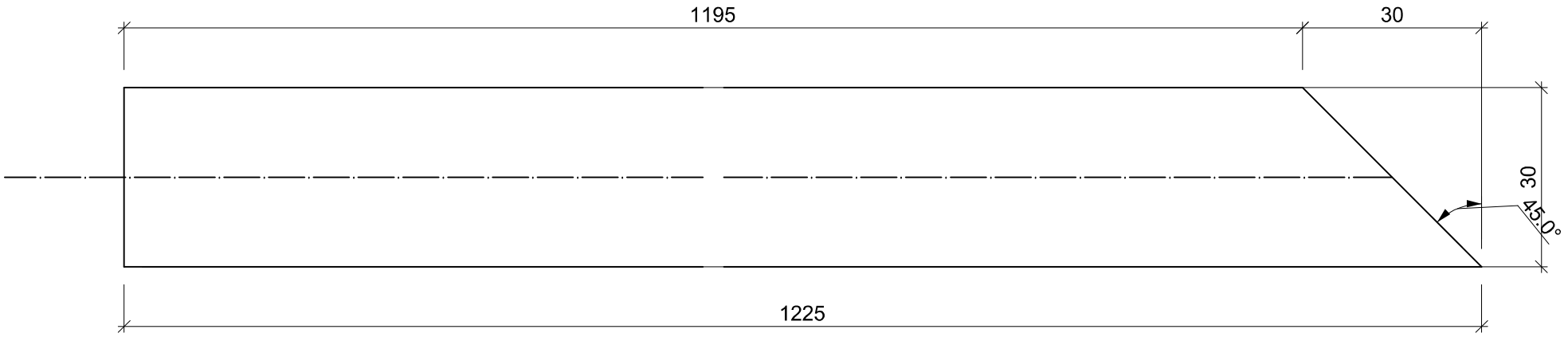

1 No. FL30X10 - Mkd F9

Index	Date	Description	Author

General Notes

1. All holes 22Ø U.N.O.
2. This drawing must not be scaled.

Autodesk®

DRAWN BY	DATE	SCALE
	30/07/2018	1:1

CONTRACT

DESCRIPTION
Railing Kneerail Landing

JOB No.	DRG No.	Rev.
	[S] - F9	Rev0

Mark	Quantity	Profile	Length	Material	Area (m²)	Weight
F10	1	FL30X10	988	S275JR	0.08	2.33
						2.33

LOT	QTY
	1

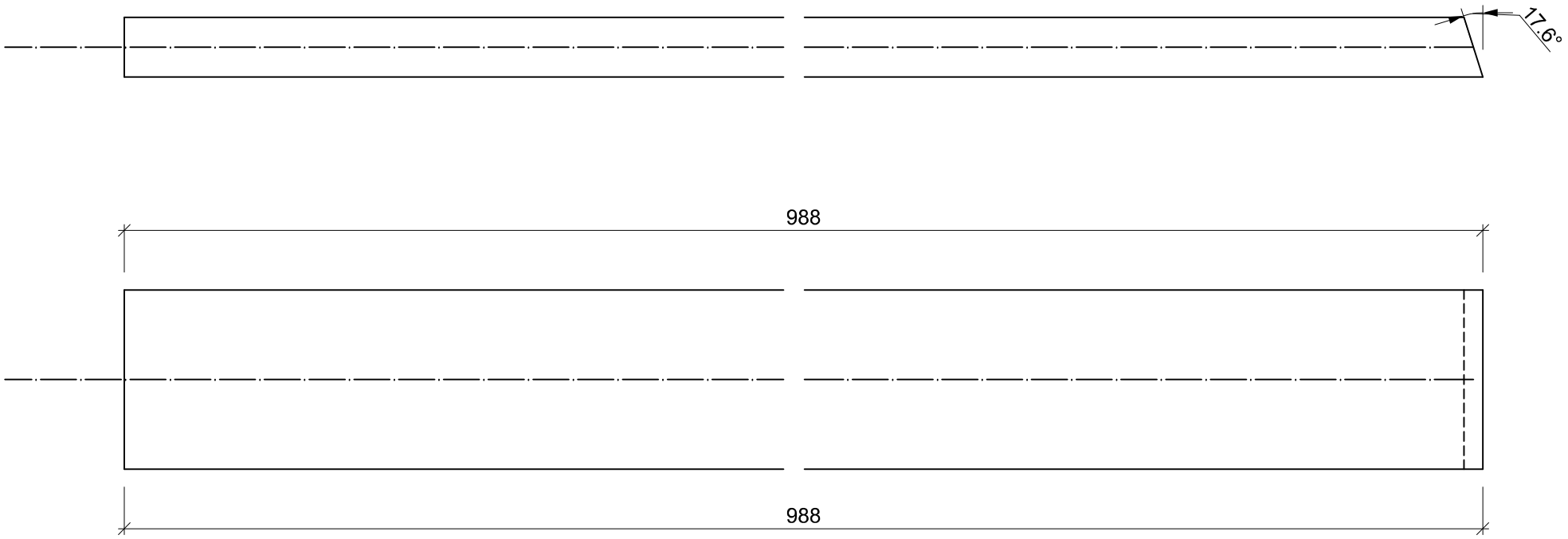

1 No. FL30X10 - Mkd F10

Index	Date	Description	Author

General Notes

1. All holes 22Ø U.N.O.
2. This drawing must not be scaled.

Autodesk®

DRAWN BY	DATE	SCALE	JOB No.	DRG No.	Rev.
	30/07/2018	1:1		[S] - F10	Rev0

CONTRACT

DESCRIPTION
Railing Kneerail Landing

Mark	Quantity	Profile	Length	Material	Area (m²)	Weight
F11	1	FL30X10	15	S275JR	0.00	0.04
						0.04

LOT	QTY
	1

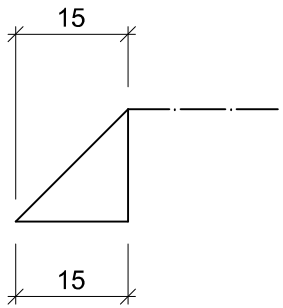

1 No. FL30X10 - Mkd F11

Index	Date	Description	Author

General Notes

1. All holes 22Ø U.N.O.
2. This drawing must not be scaled.

Autodesk®

DRAWN BY	DATE	SCALE	JOB No.	DRG No.	Rev.
	30/07/2018	1:1		[S] - F11	Rev0

CONTRACT

DESCRIPTION
Railing Kneerail Landing

Mark	Quantity	Profile	Length	Material	Area (m²)	Weight
F12	1	FL30X10	-20	S275JR	0.00	0.00
					-4710000000	000000000.00

LOT	QTY
	1

1 No. FL30X10 - Mkd F12

Index	Date	Description	Author

General Notes

1. All holes 22Ø U.N.O.
2. This drawing must not be scaled.

Autodesk®

DRAWN BY	DATE	SCALE
	30/07/2018	1:1

CONTRACT

DESCRIPTION
Railing Kneerail Stair

JOB No.	DRG No.	Rev.
	[S] - F12	Rev0

Mark	Quantity	Profile	Length	Material	Area (m²)	Weight
F13	1	RD12	950	S275JR	0.04	0.84
						0.84

LOT	QTY
	1

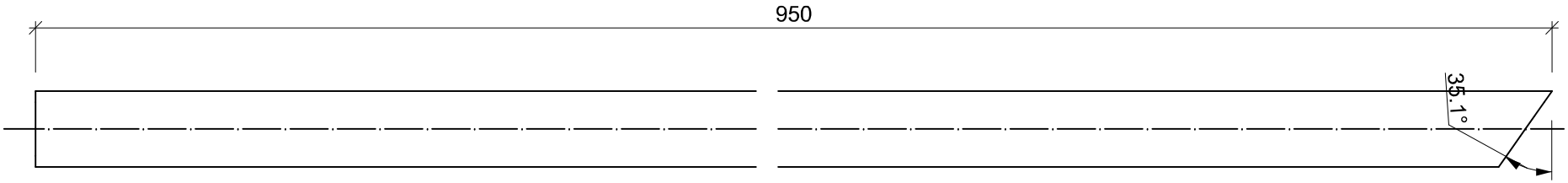

1 No. RD12 - Mkd F13

Index	Date	Description	Author

General Notes

1. All holes 22Ø U.N.O.
2. This drawing must not be scaled.

Autodesk®

DRAWN BY	DATE	SCALE	JOB No.	DRG No.	Rev.
	30/07/2018	1:1		[S] - F13	Rev0

CONTRACT

DESCRIPTION
Railing Baluster Landing

Mark	Quantity	Profile	Length	Material	Area (m²)	Weight
F14	1	RD12	880	S275JR	0.03	0.78
						0.78

LOT	QTY
	1

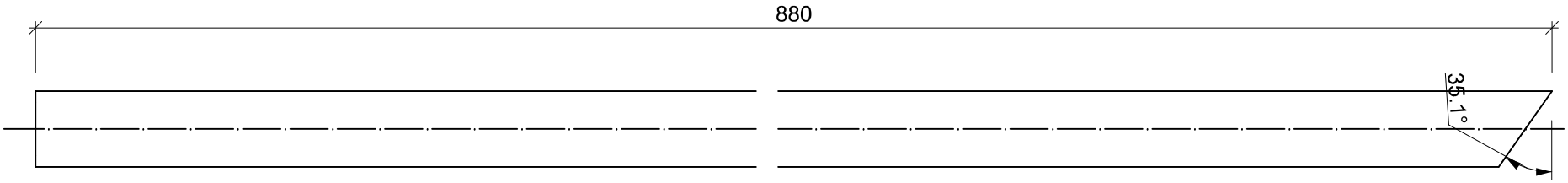

1 No. RD12 - Mkd F14

Index	Date	Description	Author

General Notes

1. All holes 22Ø U.N.O.
2. This drawing must not be scaled.

Autodesk®

DRAWN BY	DATE	SCALE	JOB No.	DRG No.	Rev.
	30/07/2018	1:1		[S] - F14	Rev0

CONTRACT

DESCRIPTION
Railing Baluster Landing

Mark	Quantity	Profile	Length	Material	Area (m²)	Weight
F15	2	FL50X10	200	S275JR	0.03	0.78
						1.57

LOT	QTY
	2

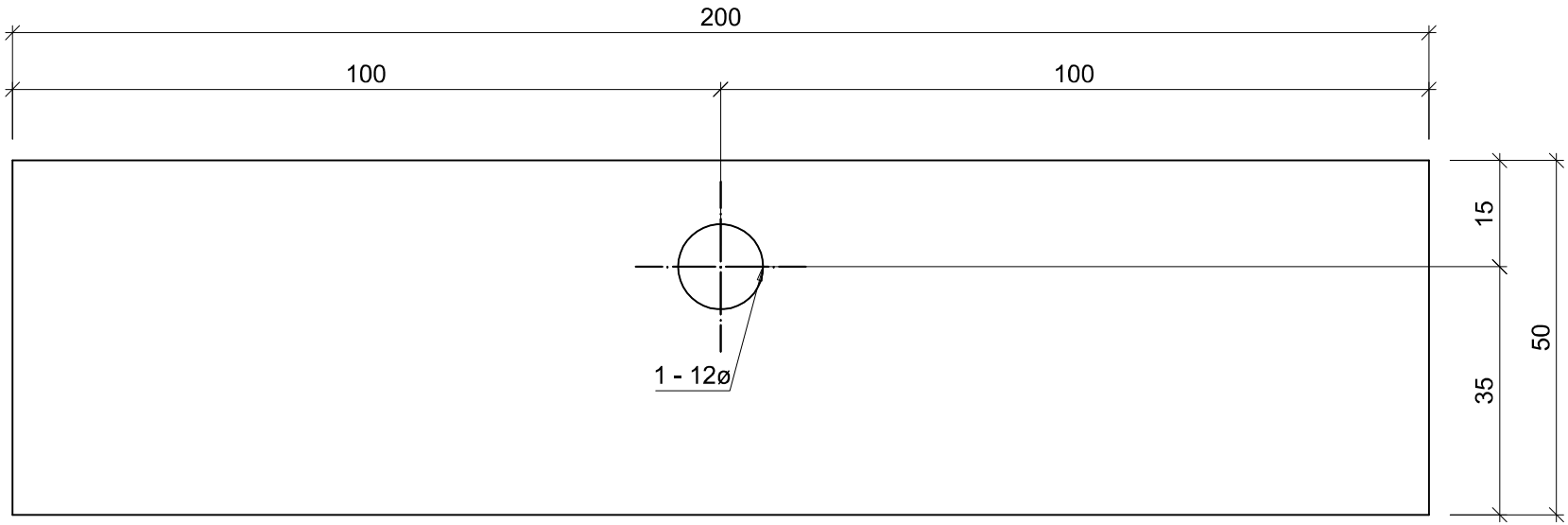

2 No. FL50X10 - Mkd F15

Index	Date	Description	Author

General Notes

1. All holes 22Ø U.N.O.
2. This drawing must not be scaled.

Autodesk®

DRAWN BY	DATE	SCALE	JOB No.	DRG No.	Rev.
	30/07/2018	1:1		[S] - F15	Rev0

CONTRACT

DESCRIPTION
Base Plate

Mark	Quantity	Profile	Length	Material	Area (m²)	Weight
F16	2	FL400X15	400	S275JR	0.34	18.84
						37.68

LOT	QTY
	2

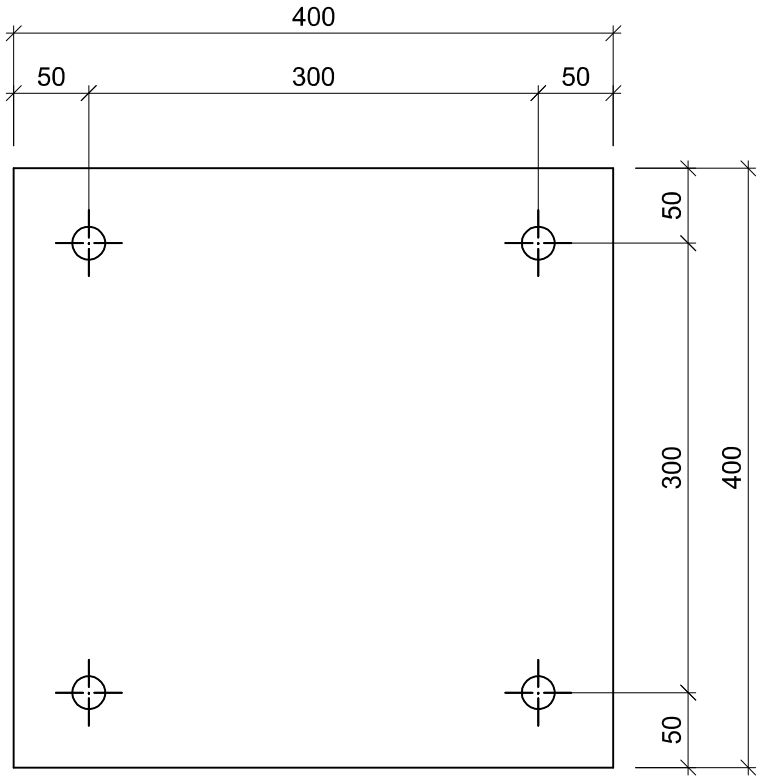

2 No. FL400X15 - Mkd F16

Index	Date	Description	Author

General Notes

1. All holes 22Ø U.N.O.
2. This drawing must not be scaled.

Autodesk®

DRAWN BY	DATE	SCALE	JOB No.	DRG No.	Rev.
	30/07/2018	1:5		[S] - F16	Rev0

CONTRACT

DESCRIPTION
Base Plate

Mark	Quantity	Profile	Length	Material	Area (m²)	Weight
M1	32	L60X5	200	S275JR	0.05	0.91
						29.25

LOT	QTY
	32

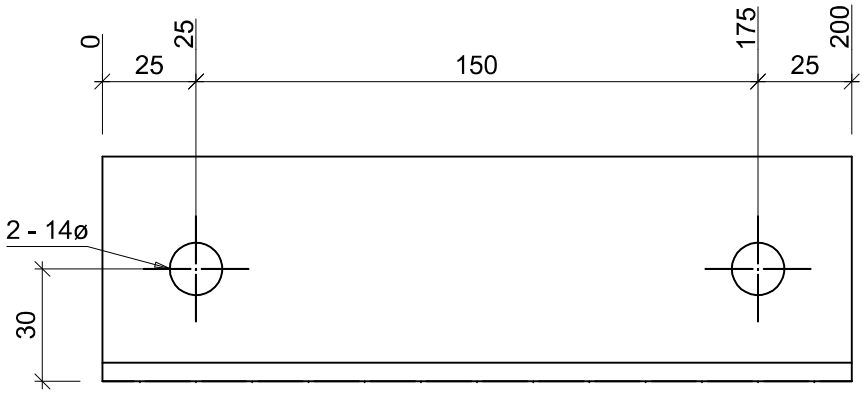

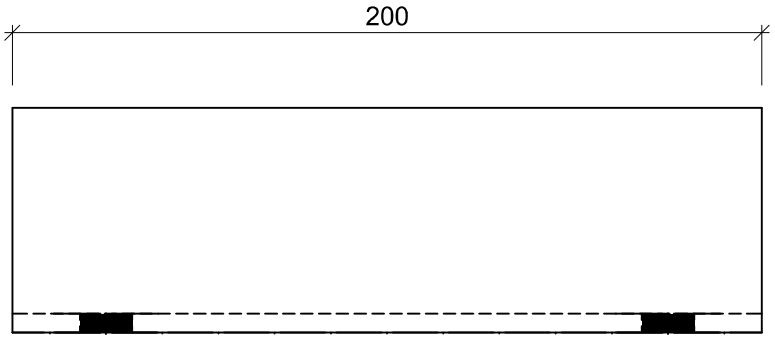

32 No. L60X5 - Mkd M1

Index	Date	Description	Author

General Notes

1. All holes 22Ø U.N.O.
2. This drawing must not be scaled.

Autodesk®

DRAWN BY	DATE	SCALE	JOB No.	DRG No.	Rev.
	30/07/2018	1:2		[S] - M1	Rev0

CONTRACT

DESCRIPTION
Angle

Mark	Quantity	Profile	Length	Material	Area (m²)	Weight
M2	16	Folded PLT4.5x1100x367.75	1100	S275JR	0.82	14.41
						230.49

LOT	QTY
	16

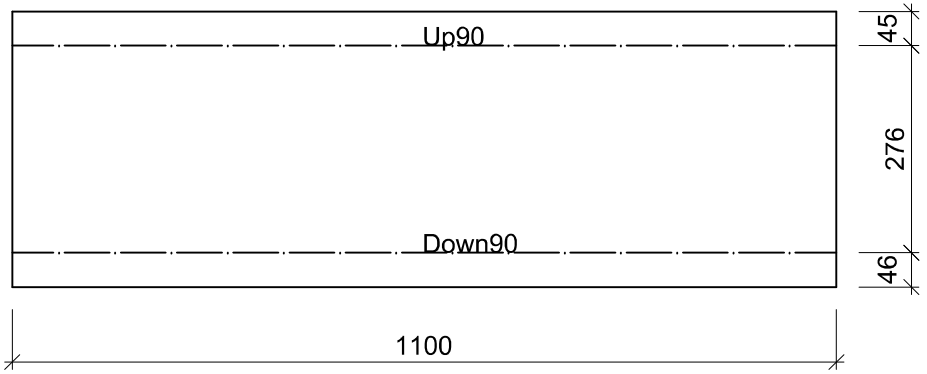

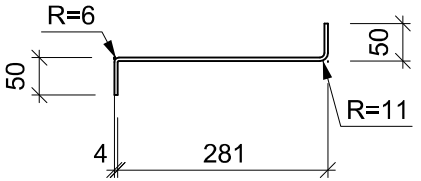

16 No. Folded PLT4.5x1100x367.75 - Mkd M2

Index	Date	Description	Author

General Notes

1. All holes 22Ø U.N.O.
2. This drawing must not be scaled.

Autodesk®

DRAWN BY	DATE	SCALE	JOB No.	DRG No.	Rev.
	30/07/2018	1:10		[S] - M2	Rev0

CONTRACT

DESCRIPTION
Step

LOT	QTY
	2

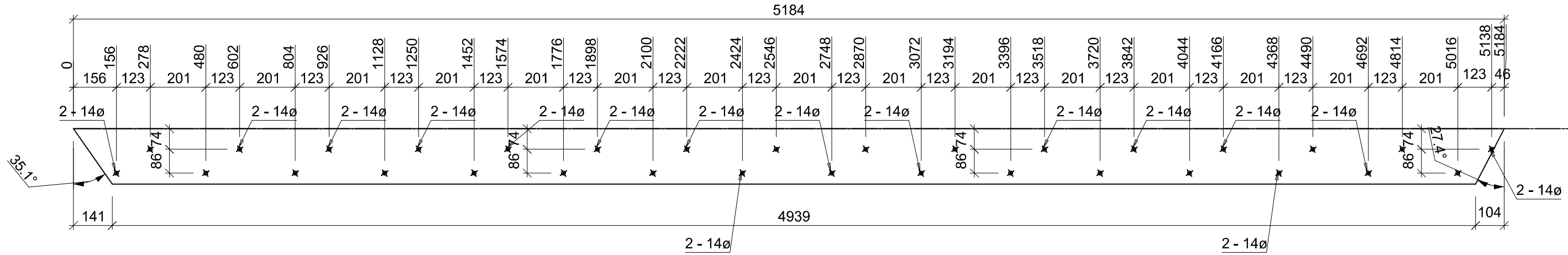

2 No. FL200X10 - Mkd M3

Mark	Quantity	Profile	Length	Material	Area (m²)	Weight
M3	2	FL200X10	5184	S275JR	2.18	81.39
						162.78

General Notes

1. All holes 22Ø U.N.O.
2. This drawing must not be scaled.

Index	Date	Description	Author

Autodesk®

CONTRACT	
DESCRIPTION	Stringer

DRAWN BY	DATE	SCALE	JOB No.	DRG No.	Rev.
	30/07/2018	1:15		[S] - M3	Rev0

Mark	Quantity	Profile	Length	Material	Area (m²)	Weight
M4	2	FL200X10	176	S275JR	0.07	2.77
						5.54

LOT	QTY
	2

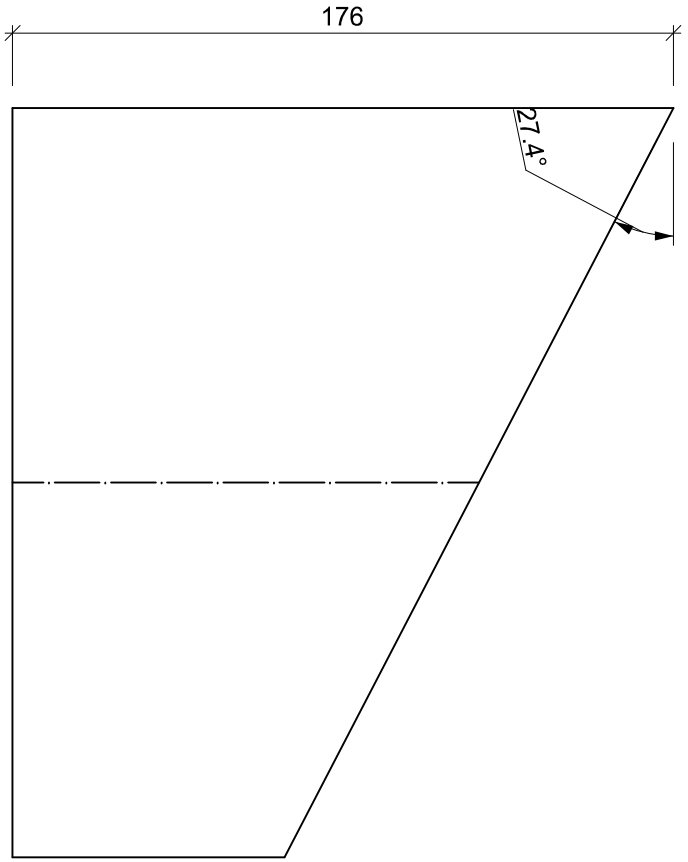

2 No. FL200X10 - Mkd M4

Index	Date	Description	Author

General Notes

1. All holes 22Ø U.N.O.
2. This drawing must not be scaled.

Autodesk®

DRAWN BY	DATE	SCALE	JOB No.	DRG No.	Rev.
	30/07/2018	1:2		[S] - M4	Rev0

CONTRACT

DESCRIPTION
Stringer

Mark	Quantity	Profile	Length	Material	Area (m²)	Weight
M5	1	FL40X10	5525	S275JR	0.55	17.35
						17.35

LOT	QTY
	1

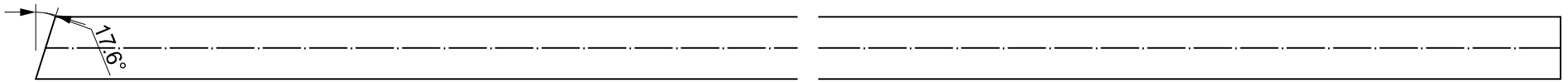

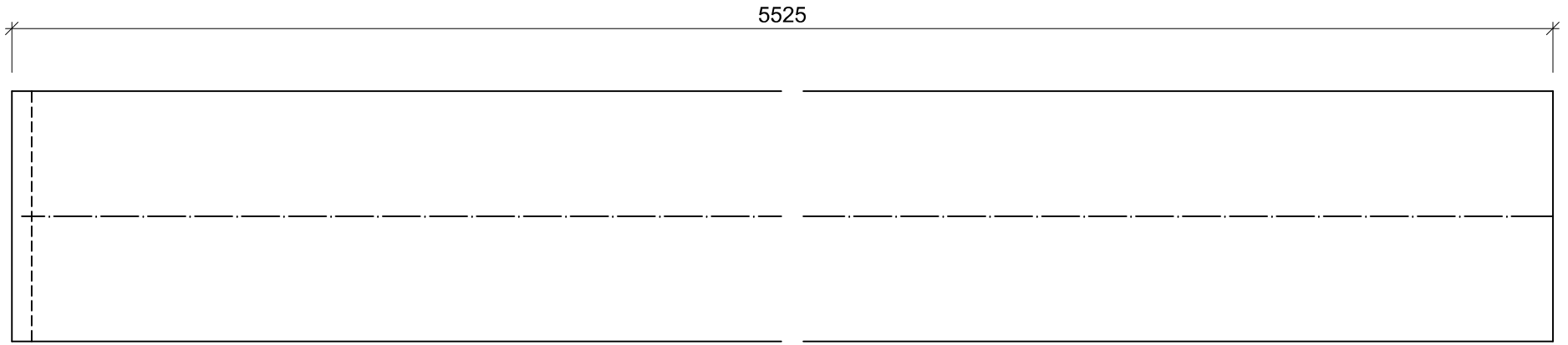

1 No. FL40X10 - Mkd M5

Index	Date	Description	Author

General Notes

1. All holes 22Ø U.N.O.
2. This drawing must not be scaled.

Autodesk®

DRAWN BY	DATE	SCALE	JOB No.	DRG No.	Rev.
	30/07/2018	1:1		[S] - M5	Rev0

CONTRACT

DESCRIPTION
Railing Handrail Stair

Mark	Quantity	Profile	Length	Material	Area (m²)	Weight
M6	1	FL40X10	5169	S275JR	0.52	16.23
						16.23

LOT	QTY
	1

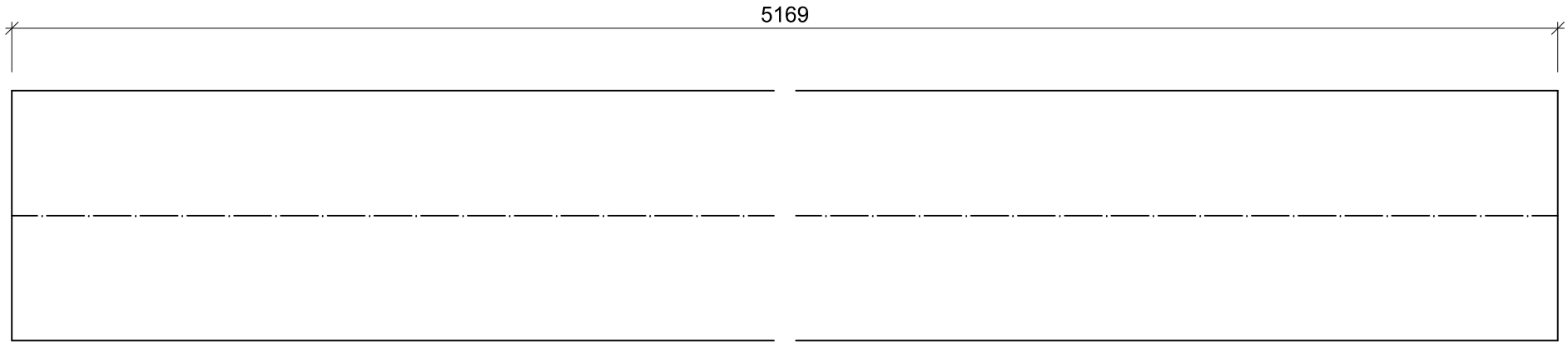

1 No. FL40X10 - Mkd M6

Index	Date	Description	Author

General Notes

1. All holes 22Ø U.N.O.
2. This drawing must not be scaled.

Autodesk®

DRAWN BY	DATE	SCALE	JOB No.	DRG No.	Rev.
	30/07/2018	1:1		[S] - M6	Rev0

CONTRACT

DESCRIPTION
Railing Handrail Stair

Mark	Quantity	Profile	Length	Material	Area (m²)	Weight
M7	1	FL40X10	2736	S275JR	0.27	8.59
						8.59

LOT	QTY
	1

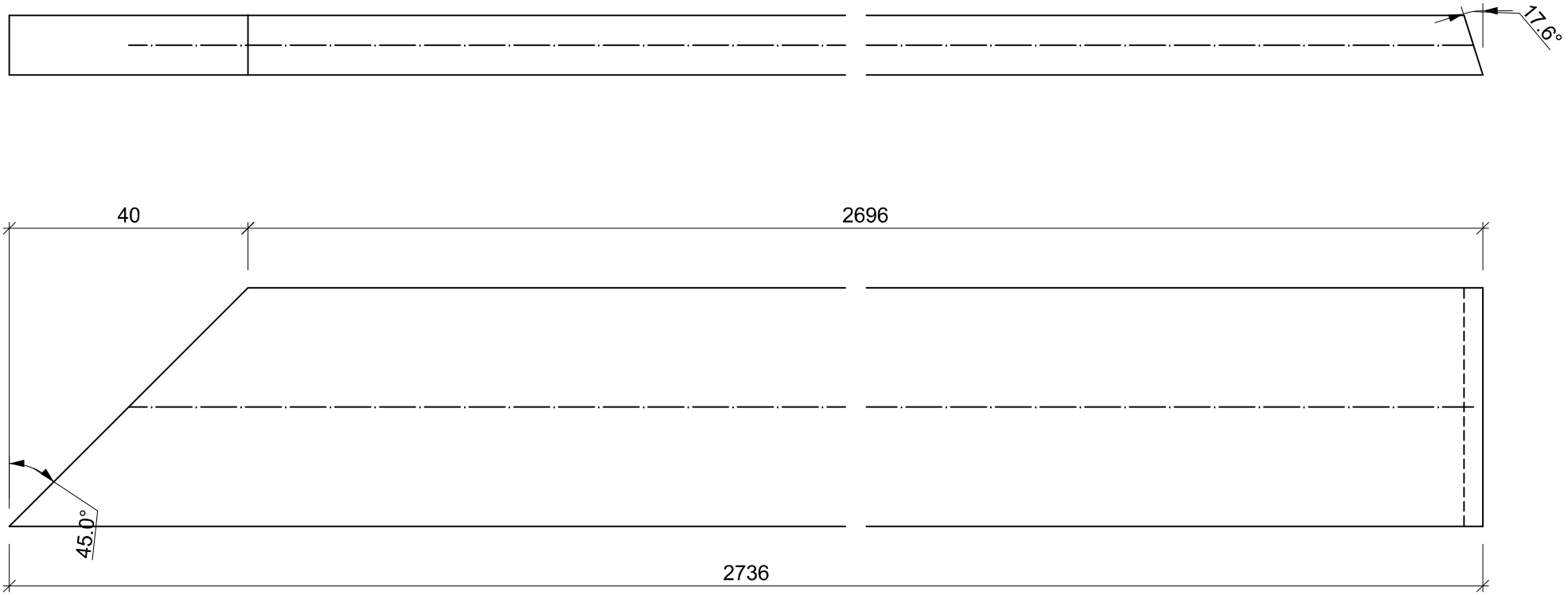

1 No. FL40X10 - Mkd M7

Index	Date	Description	Author

General Notes

1. All holes 22Ø U.N.O.
2. This drawing must not be scaled.

Autodesk®

DRAWN BY	DATE	SCALE
	30/07/2018	1:1

CONTRACT

DESCRIPTION
Railing Handrail Landing

JOB No.	DRG No.	Rev.
	[S] - M7	Rev0

Mark	Quantity	Profile	Length	Material	Area (m²)	Weight
M8	1	FL40X10	1270	S275JR	0.13	3.99
						3.99

LOT	QTY
	1



1 No. FL40X10 - Mkd M8

Index	Date	Description	Author

General Notes

1. All holes 22Ø U.N.O.
2. This drawing must not be scaled.

Autodesk®

DRAWN BY	DATE	SCALE	JOB No.	DRG No.	Rev.
	30/07/2018	1:1		[S] - M8	Rev0

CONTRACT

DESCRIPTION
Railing Handrail Landing

Mark	Quantity	Profile	Length	Material	Area (m²)	Weight
none-2	2	FL40X10	50	S275JR	0.01	0.16
						0.31

LOT	QTY
	2

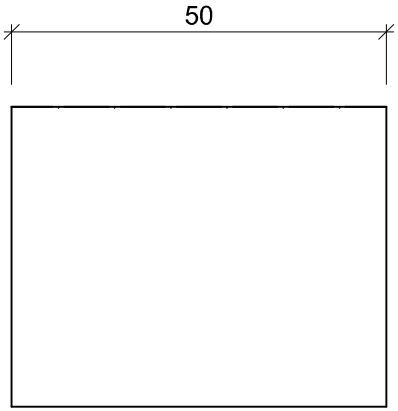

2 No. FL40X10 - Mkd none-2

Index	Date	Description	Author

General Notes

1. All holes 22Ø U.N.O.
2. This drawing must not be scaled.

Autodesk®

DRAWN BY	DATE	SCALE	JOB No.	DRG No.	Rev.
	30/07/2018	1:1		[S] - none-2	Rev0

CONTRACT

DESCRIPTION
None

Mark	Quantity	Profile	Length	Material	Area (m²)	Weight
none-4	2	PFC125x65x15	1246	S275JR	0.62	18.39
						36.78

LOT	QTY
	2

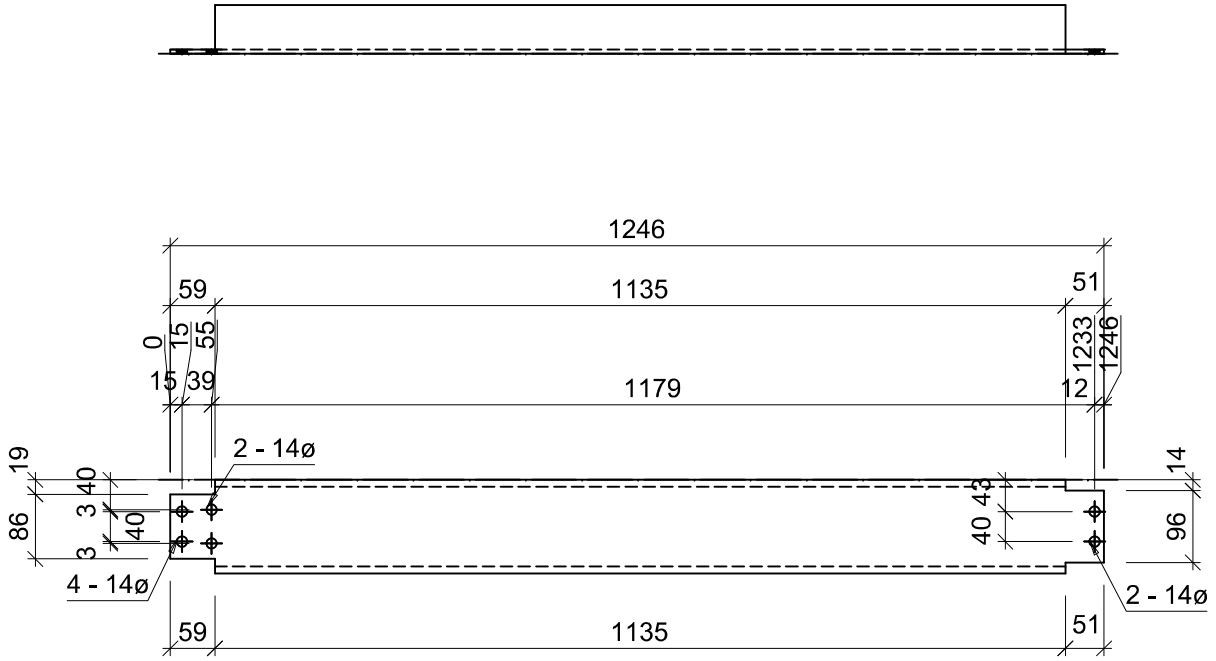

2 No. PFC125x65x15 - Mkd none-4

Index	Date	Description	Author

General Notes

1. All holes 22Ø U.N.O.
2. This drawing must not be scaled.

Autodesk®

DRAWN BY	DATE	SCALE	JOB No.	DRG No.	Rev.
	30/07/2018	1:10		[S] - none-4	Rev0

CONTRACT

DESCRIPTION
None

Mark	Quantity	Profile	Length	Material	Area (m²)	Weight
none-5	2	SHS150X6,3	3039	S275JR	1.82	85.42
						170.84

LOT	QTY
	2

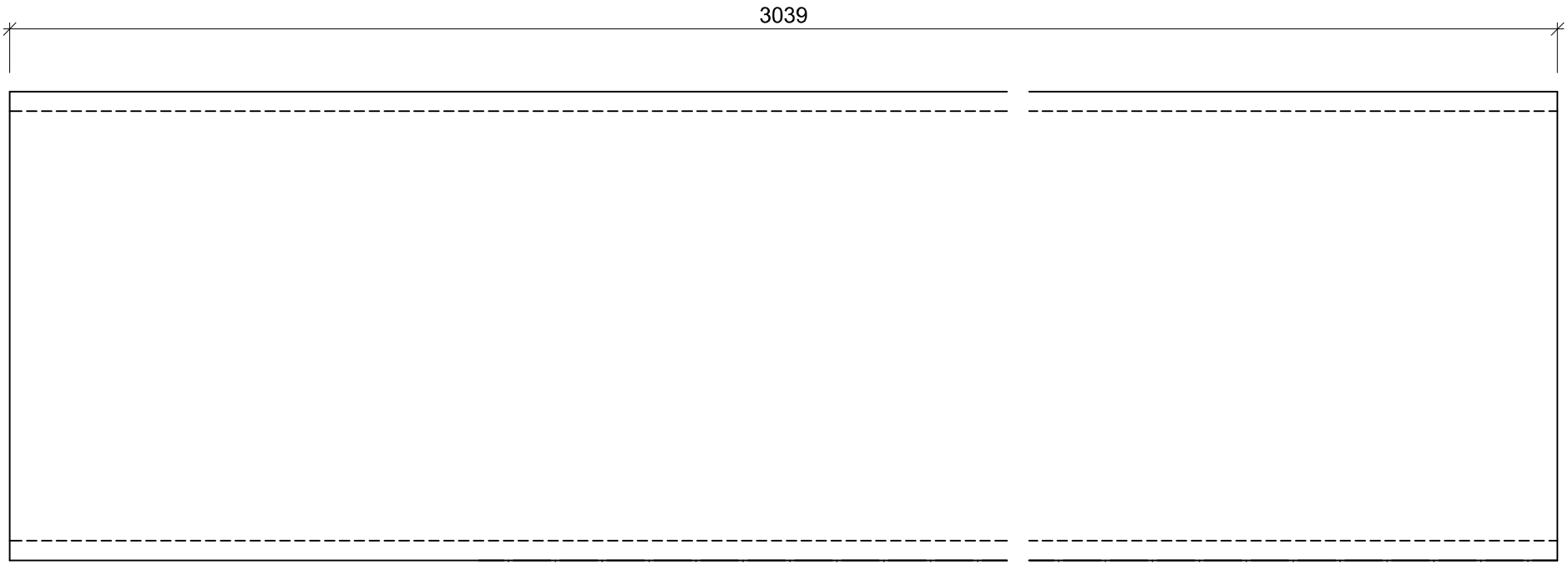

2 No. SHS150X6,3 - Mkd none-5

Index	Date	Description	Author

General Notes

1. All holes 22Ø U.N.O.
2. This drawing must not be scaled.

Autodesk®

DRAWN BY	DATE	SCALE	JOB No.	DRG No.	Rev.
	30/07/2018	1:2		[S] - none-5	Rev0

CONTRACT

DESCRIPTION
None

Mark	Quantity	Profile	Length	Material	Area (m²)	Weight
none-6	2	SHS150X6,3	1291	S275JR	0.77	36.27
						72.55

LOT	QTY
	2

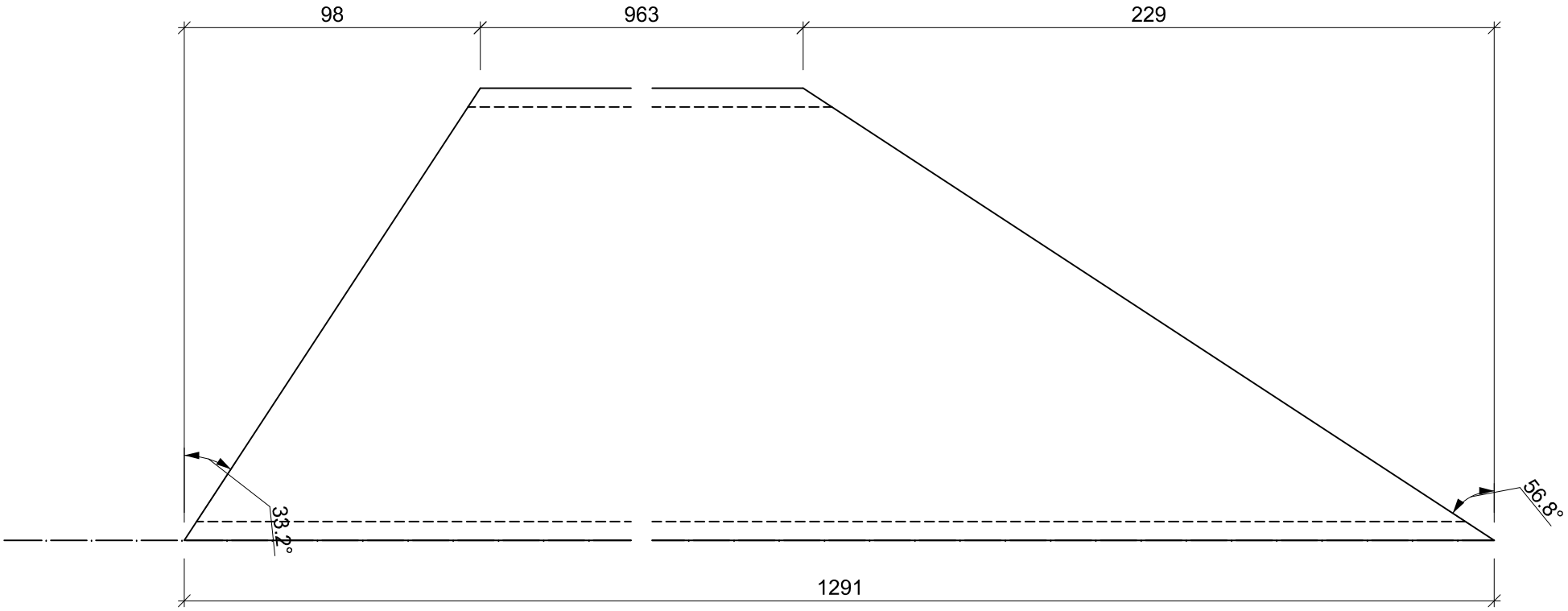

2 No. SHS150X6,3 - Mkd none-6

Index	Date	Description	Author

General Notes

1. All holes 22Ø U.N.O.
2. This drawing must not be scaled.

Autodesk®

DRAWN BY	DATE	SCALE
	30/07/2018	1:2

CONTRACT

DESCRIPTION
None

JOB No.

DRG No. [S] - none-6 Rev. Rev0

Mark	Quantity	Profile	Length	Material	Area (m²)	Weight
none-7	2	SHS150X6,3	1280	S275JR	0.77	35.97
						71.94

LOT	QTY
	2

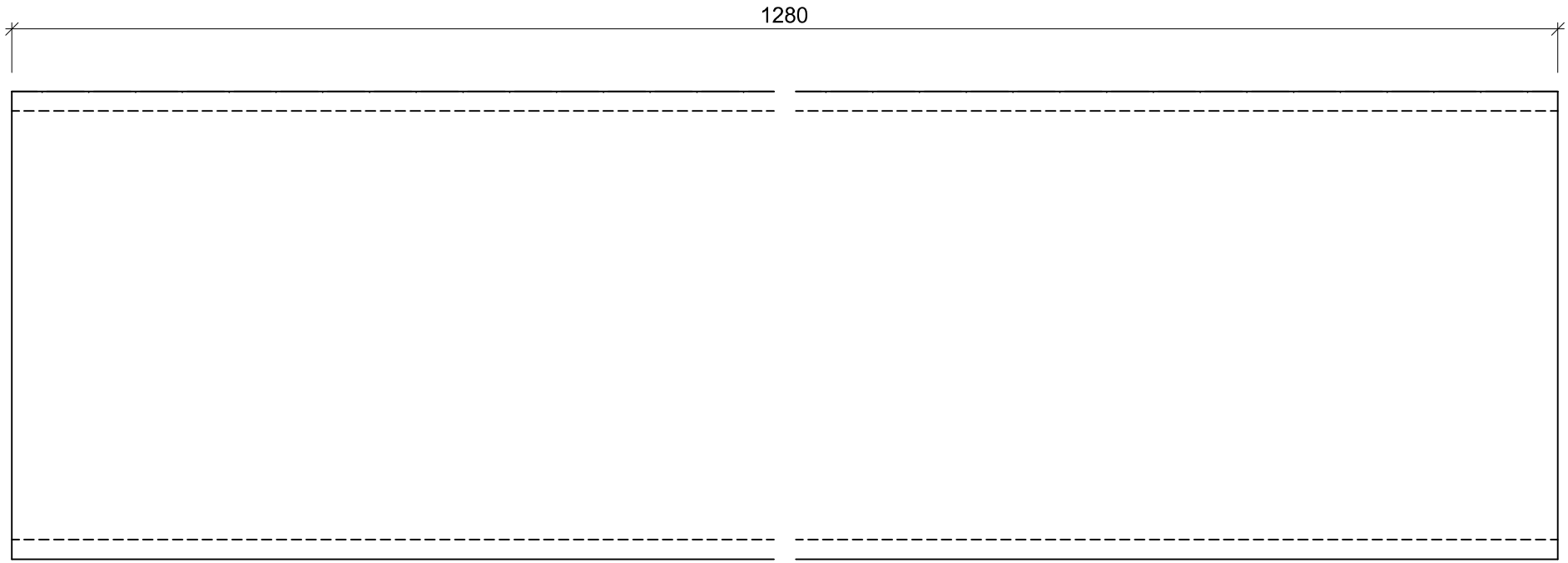

2 No. SHS150X6,3 - Mkd none-7

Index	Date	Description	Author

General Notes

1. All holes 22Ø U.N.O.
2. This drawing must not be scaled.

Autodesk®

DRAWN BY	DATE	SCALE	JOB No.	DRG No.	Rev.
	30/07/2018	1:2		[S] - none-7	Rev0

CONTRACT

DESCRIPTION None

Mark	Quantity	Profile	Length	Material	Area (m²)	Weight
none-8	1	FL40X10	800	S275JR	0.08	2.51
						2.51

LOT	QTY
	1

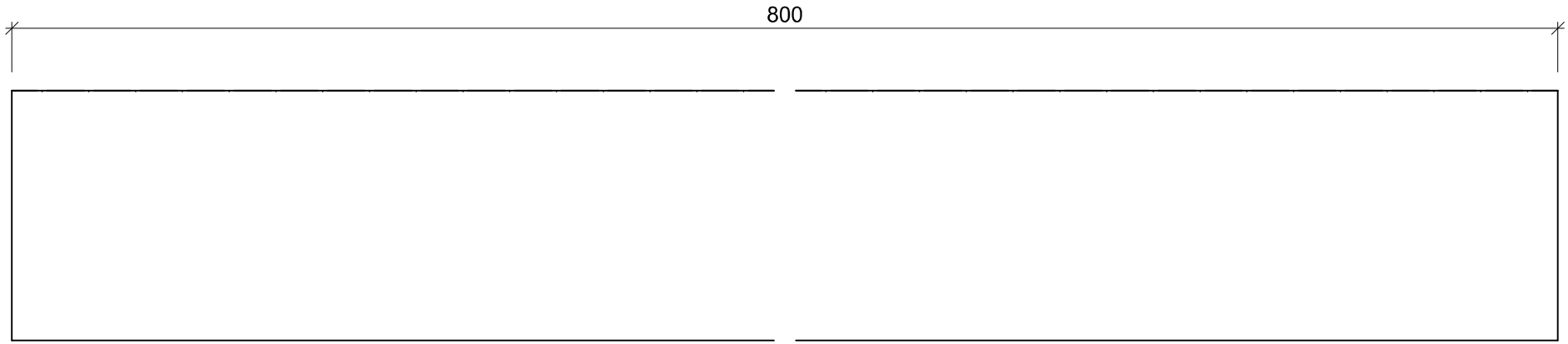

1 No. FL40X10 - Mkd none-8

Index	Date	Description	Author

General Notes

1. All holes 22Ø U.N.O.
2. This drawing must not be scaled.

Autodesk®

DRAWN BY	DATE	SCALE	JOB No.	DRG No.	Rev.
	30/07/2018	1:1		[S] - none-8	Rev0

CONTRACT

DESCRIPTION
None

Mark	Quantity	Profile	Length	Material	Area (m²)	Weight
none-9	1	PFC125x65x15	2935	S275JR	1.46	43.31
						43.31

LOT	QTY
	1

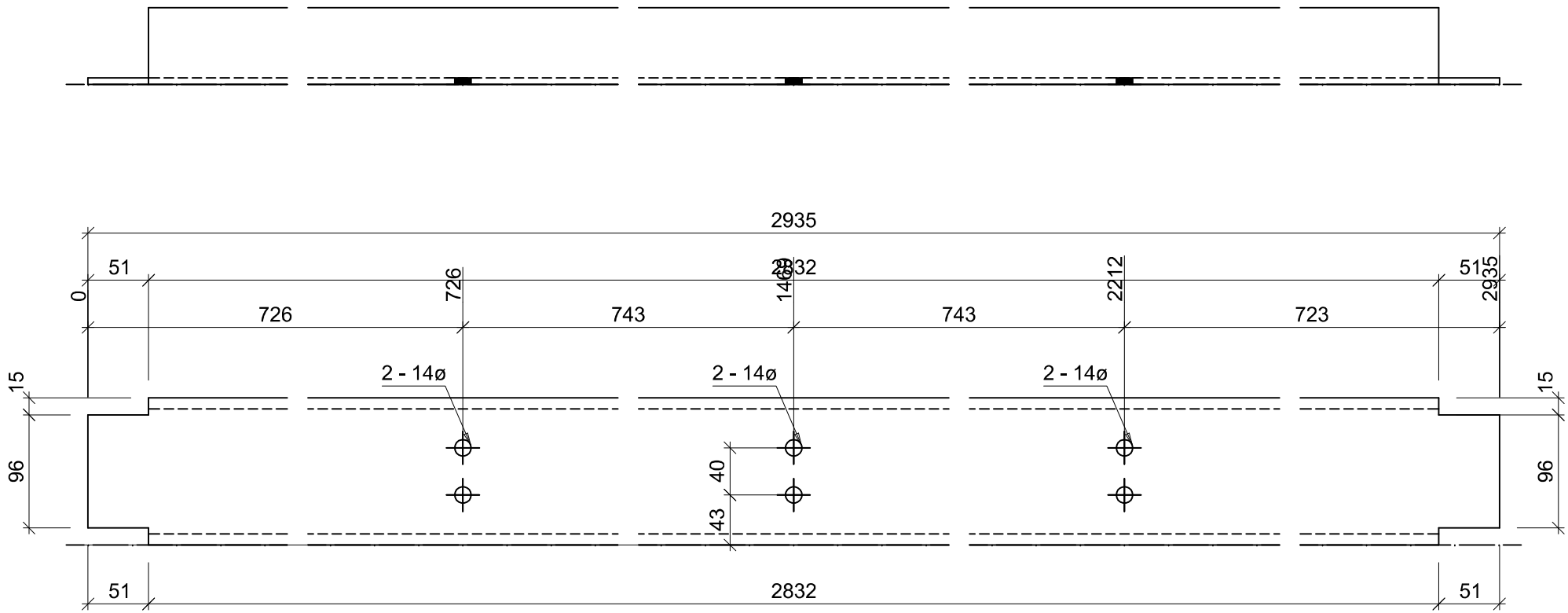

1 No. PFC125x65x15 - Mkd none-9

Index	Date	Description	Author

General Notes

1. All holes 22Ø U.N.O.
2. This drawing must not be scaled.

Autodesk®

DRAWN BY	DATE	SCALE	JOB No.	DRG No.	Rev.
	30/07/2018	1:5		[S] - none-9	Rev0

CONTRACT

DESCRIPTION None

Mark	Quantity	Profile	Length	Material	Area (m²)	Weight
none-10	1	PFC125x65x15	2935	S275JR	1.46	43.31
						43.31

LOT	QTY
	1

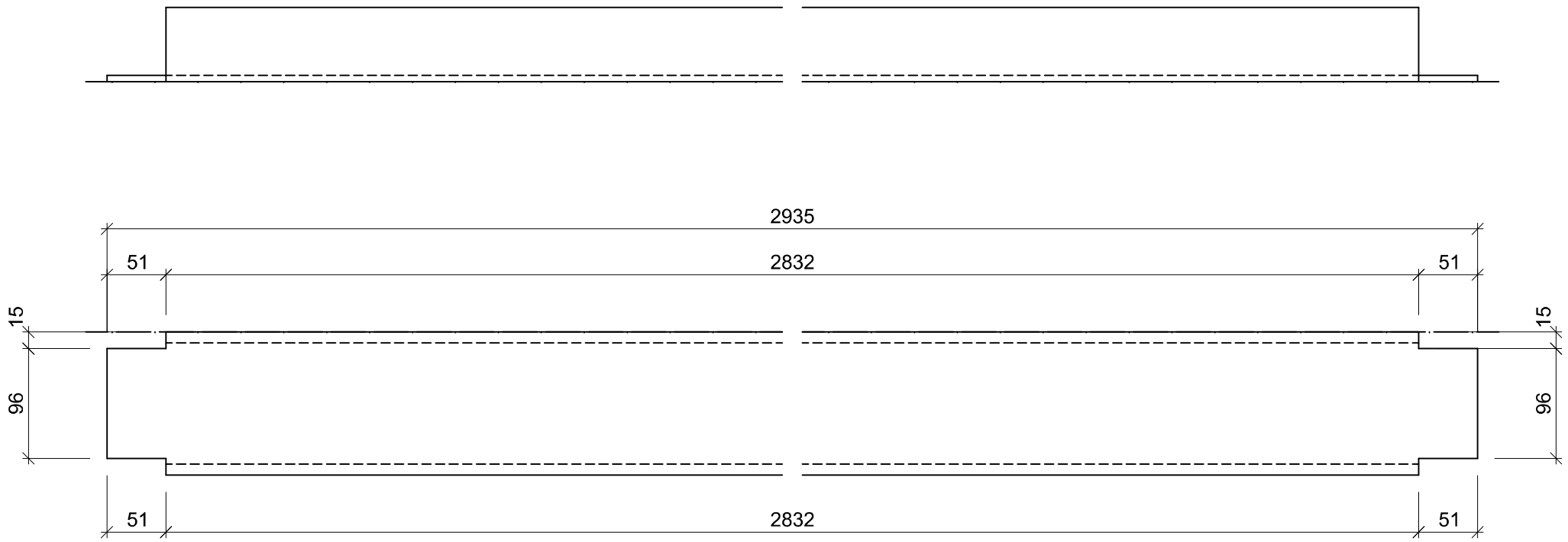

1 No. PFC125x65x15 - Mkd none-10

Index	Date	Description	Author

General Notes

1. All holes 22Ø U.N.O.
2. This drawing must not be scaled.

Autodesk®

DRAWN BY	DATE	SCALE	JOB No.	DRG No.	Rev.
	30/07/2018	1:5		[S] - none-10	Rev0

CONTRACT

DESCRIPTION None

Mark	Quantity	Profile	Length	Material	Area (m²)	Weight
none-11	1	PFC125x65x15	1280	S275JR	0.64	18.89
						18.89

LOT	QTY
	1

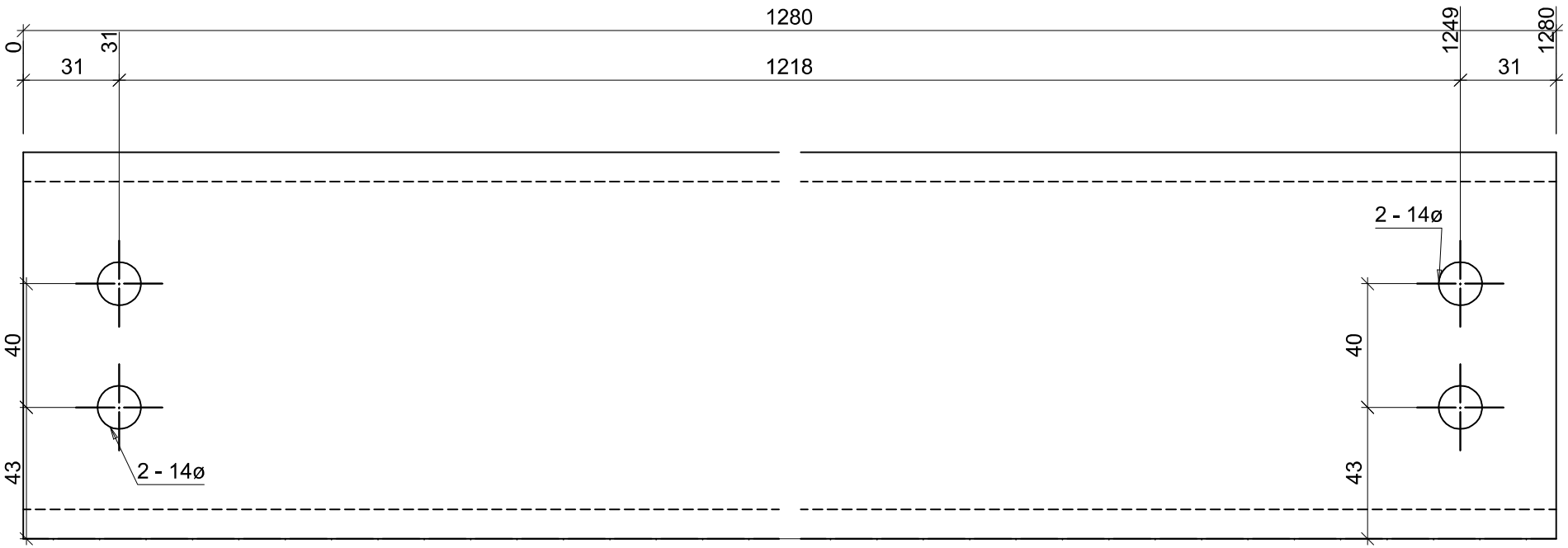

1 No. PFC125x65x15 - Mkd none-11

Index	Date	Description	Author

General Notes

1. All holes 22Ø U.N.O.
2. This drawing must not be scaled.

Autodesk®

DRAWN BY	DATE	SCALE	JOB No.	DRG No.	Rev.
	30/07/2018	1:2		[S] - none-11	Rev0

CONTRACT

DESCRIPTION
None

Mark	Quantity	Profile	Length	Material	Area (m²)	Weight
none-12	1	PFC125x65x15	1280	S275JR	0.64	18.89
						18.89

LOT	QTY
	1

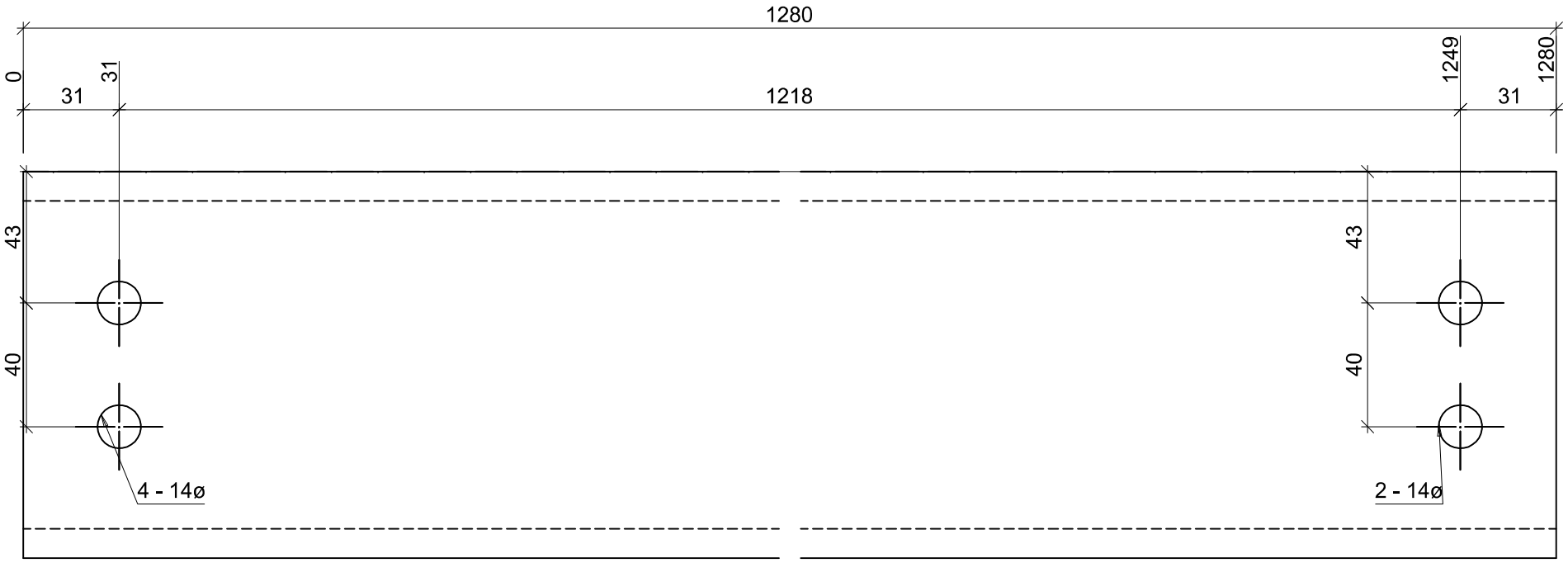

1 No. PFC125x65x15 - Mkd none-12

Index	Date	Description	Author

General Notes

1. All holes 22Ø U.N.O.
2. This drawing must not be scaled.

Autodesk®

DRAWN BY	DATE	SCALE	JOB No.	DRG No.	Rev.
	30/07/2018	1:2		[S] - none-12	Rev0

CONTRACT

DESCRIPTION
None

Mark	Quantity	Profile	Length	Material	Area (m²)	Weight
none-13	1	UKPFC125x65x15	1246	S275JR	0.61	18.44
						18.44

LOT	QTY
	1

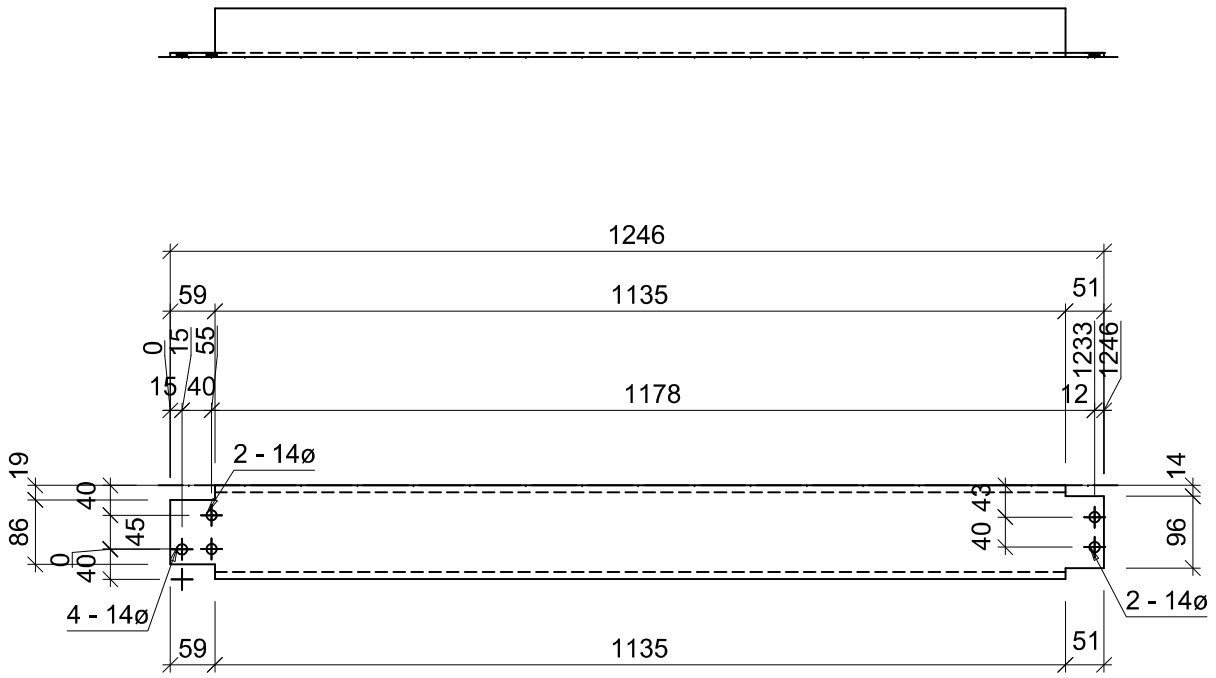

1 No. UKPFC125x65x15 - Mkd none-13

Index	Date	Description	Author

General Notes

1. All holes 22Ø U.N.O.
2. This drawing must not be scaled.

Autodesk®

DRAWN BY	DATE	SCALE	JOB No.	DRG No.	Rev.
	30/07/2018	1:10		[S] - none-13	Rev0

CONTRACT

DESCRIPTION None

Mark	Quantity	Profile	Length	Material	Area (m²)	Weight
none-14	1	PLT4.5x1280	2972	Durbar Plate	7.65	134.38
						134.38

LOT	QTY
	1

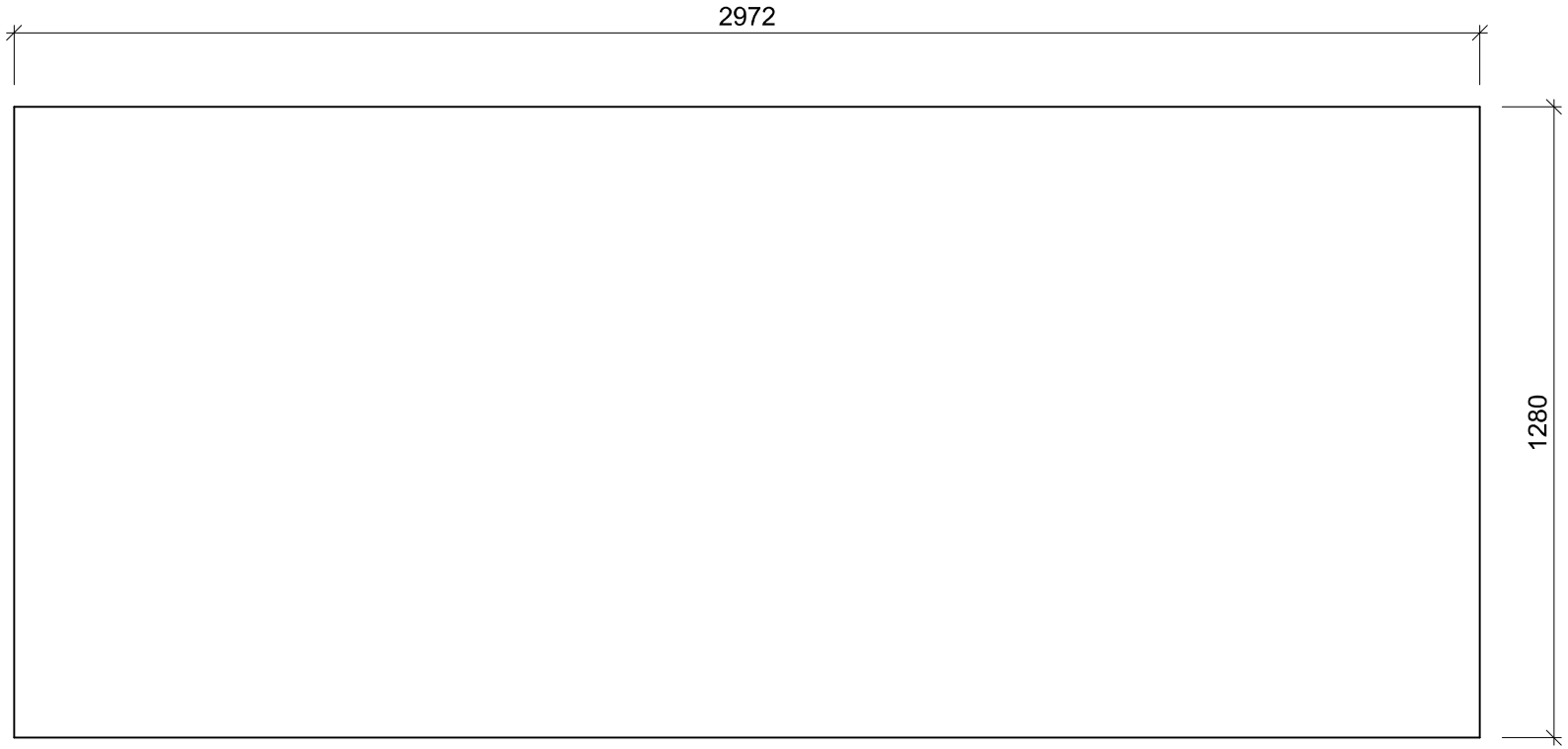

1 No. PLT4.5x1280 - Mkd none-14

Index	Date	Description	Author

General Notes

1. All holes 22Ø U.N.O.
2. This drawing must not be scaled.

Autodesk®

CONTRACT	
DESCRIPTION	None

DRAWN BY	DATE	SCALE	JOB No.	DRG No.	Rev.
	30/07/2018	1:15		[S] - none-14	Rev0