Roseview windows

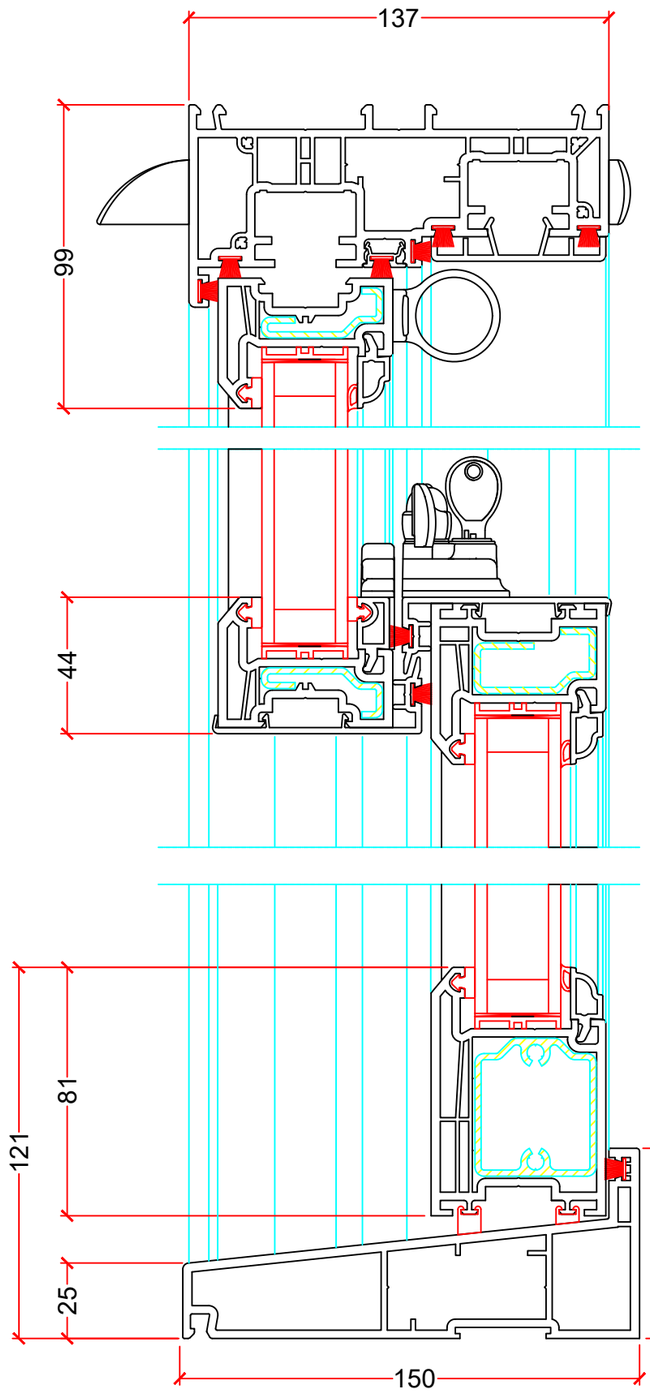

C-C Section Detail

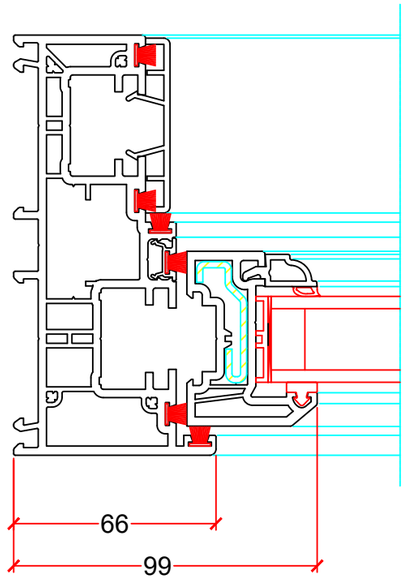

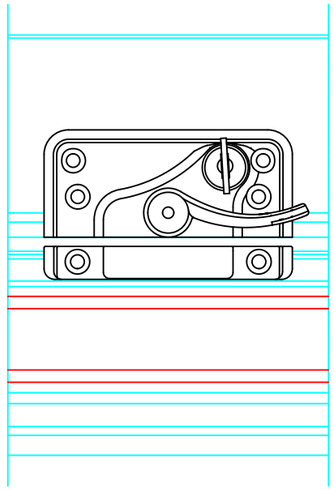

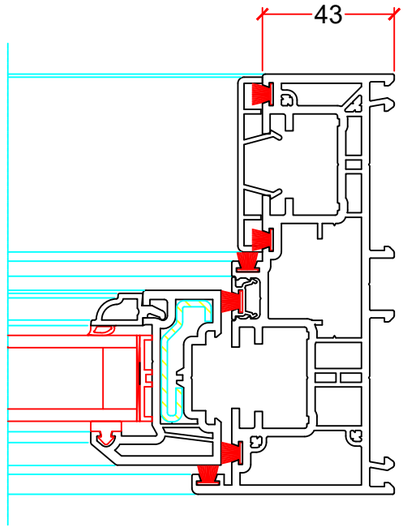

A-A Section Detail

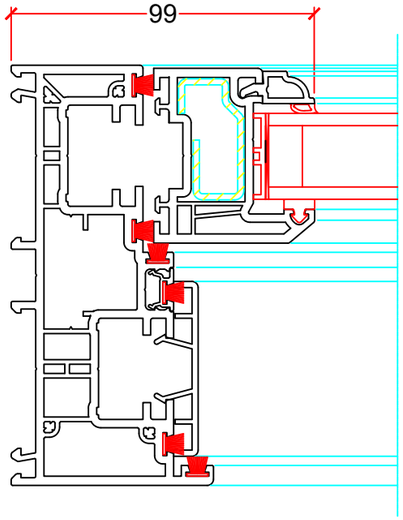

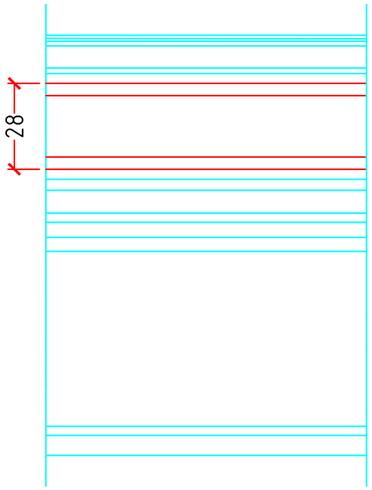

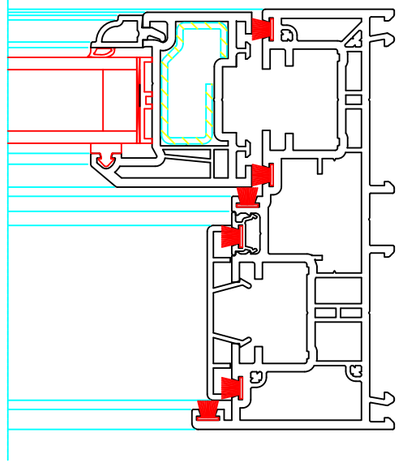

B-B Section Detail

Heritage rose

Buckingham BN11 2AY Rev1
Roseview Heritage
© March 2024
Scale 1:2 @ A3