* SECONDARY D/GLAZING DETAILS *

T.P. OFFICE COPY

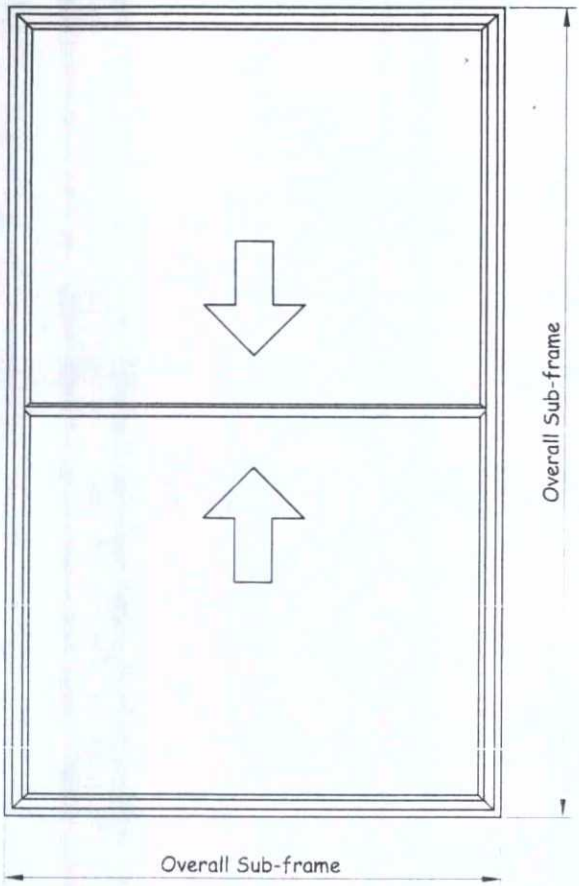

Typical elevation of a Vertical Slider.

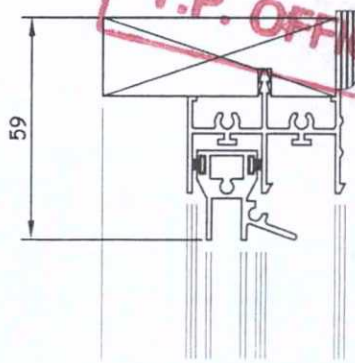

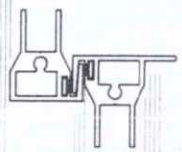

BOROUGH OF WORTHING
DEPOSITED 14/3/11
TP REF No.
WB/11/0209/FUL

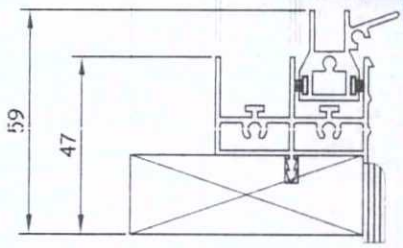

Section through the Vertical Slider.

Specification:

Aluminium sections are to be extruded from 6060 alloy EN755-2.
EP White Gloss - 60 Micron finish.
All aluminium to be powder coated to BS 6496.
Frames and sashes are to be mechanically jointed using BZP screws to DIN 7982 - 8 microns.
The sub-frame is from English hardwood, kiln dried to KD:FAS1F.
Sub-frames are butt jointed using BZP screws to DIN 965 - 8 microns.
Standard sizes 45mm x 21mm & 62mm x 21mm.
Non-standard sizes are available to order.
All frames are factory glazed.
A choice of 4mm or 6mm clear float annealed or toughened.
6.4mm clear laminate or 6.4mm Acoustic Glass.
Gaskets are in accordance with BS 2782 in a standard colour of BLACK.
All sash polypropylene woolpiles are to BS 7386.
All frames include upvc or timber trim

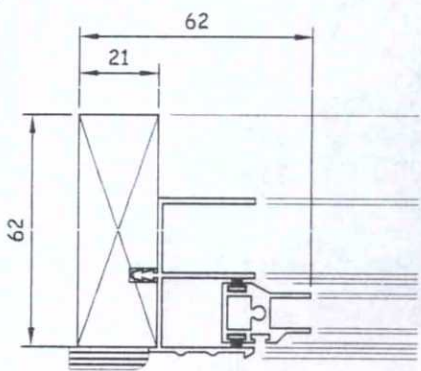

Vertical Slider Jamb detail.

Revision:			
Drg. No.	BVS RF	Scale:	1:20 & 1:2 (at A4)
Client:		Drawn by:	Nick Hough
Architect:		Date:	
Contract:	Balanced Vertical Slider details. Reveal Fix.		

This drawing is the property of GRANADA Secondary Glazing Limited and may not be reproduced without their authorisation.

GRANADA
secondary glazing limited

Units 1 & 2.
Carrwood Road
Chesterfield Trading Estate
Chesterfield
S41 9QB
Tel: 01246 261262
Fax: 01246 261263

AIRO

Test Certificate

SOUND REDUCTION INDEX

4/150/6 SECONDARY WINDOW UNIT

MEASUREMENTS

Sound Reduction Index (R) measurements were conducted at the AIRO Acoustics Laboratory in accordance with BS 2750: Part 3:1980 and BS 5821:Part 3:1984, using a purpose built sound transmission suite. AIRO is accredited as NAMAS TESTING Laboratory No. 0483. The test was performed on 19 September 1997.

DESCRIPTION

The specimen filled a 1250mm wide x 1500mm high test aperture and comprised a primary and secondary window system. The primary unit consisted of a softwood frame which was glazed with 2 no 4mm fixed panes of area 520 x 1370mm each. The secondary unit consisted of a pair of horizontally sliding sashes with 6mm glazing of area 540 x 1365mm supported in a aluminium framework with an outer frame of English Ash. The cavity between the primary and secondary glazing was 150mm.

Estimated mass of the glazing = 25 kg/m^2
Tested for and supplied by Granada Secondary Glazing Limited

RESULTS

Frequency Hz	R dB	Frequency Hz	R dB
100	23.2	800	49.8
125	26.9	1000	51.9
160	30.1	1250	51.0
200	36.8	1600	50.5
250	37.8	2000	50.0
315	37.1	2500	48.9
400	34.6	3150	43.3
500	43.1	4000	41.0
630	45.7	5000	44.5

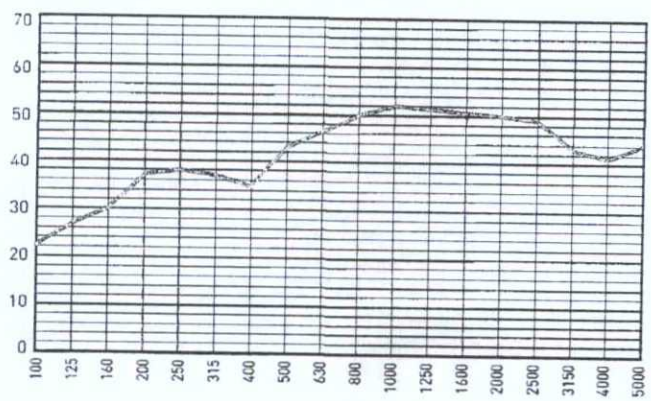

The Weighed Sound Reduction Index, R_W = 45 dB (BS 5821:Part 3:1984) with an unfavourable deviation of 9.4 dB at 400 Hz

This Test Certificate summarises Report No. L/2543 dated 4 November 1997

A J Jones Bsc PhD Cphys MInstP FIOAM Sawyer MIOA
Managing Director Laboratory Supervisor

Duxons Turn, Marylands Avenue, Hemel Hempstead, Hertfordshire, HP2 4SB. T: 01442 247146

NAMAS
TESTING
No 0483

* TO SASH WINDOWS + SECONDARY D/GLAZING *

GREENWOOD AIRVAC
Environmental

EHA574

Acoustic Humidity Control Ventilator

T.P. OFFICE COPY

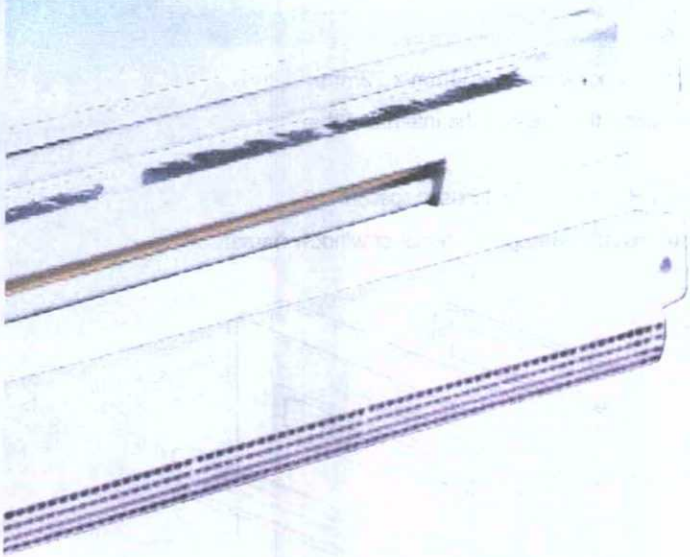

- *Humidity control trickle ventilator*
- *Self-regulating internal mechanism*
- *Provides excellent acoustic attenuation*
- *Suitable for use as a through-frame ventilator*

The Greenwood EHA humidity sensitive acoustic air inlet provides trickle ventilation helping prevent condensation and building degradation. Designed to offer 4000mm² free area and a permanent regulated airflow throughout the dwelling, the ventilator operates at all temperatures, independent of any power sources.

The vent offers effective protection against noise, providing an attenuation of 44dB in the open setting, which has no effect on flow rates and is suitable for installation where external noise is a problems, such as airports, busy roads and industrial sites.

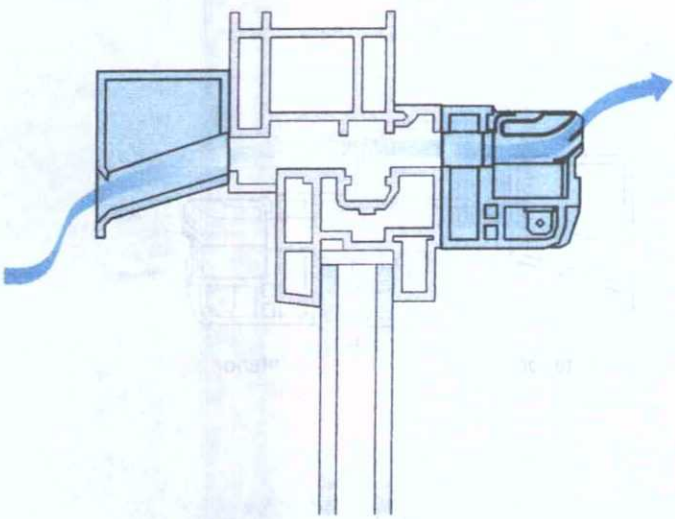

Supplied as a complete unit, comprising humidity sensitive internal mechanism, acoustic spacer and acoustic canopy, the EHA is quick to install on PVC and timber framed windows. Manufactured from ABS material, the vent is available in white as standard and alternative colours available on request.

Humidity is the condition of the atmosphere in relation to the water vapour it contains. Water vapour is always present in the air in varying amounts, the amount that the air can hold depends on its temperature, the higher the temperature the more water vapour. The 'dew' point is the temperature at which air containing a certain amount of water vapour becomes saturated and further reduction in temperature would result in condensation.

BOROUGH OF WORTHING
DEPOSITED
TP REF No.
WB / /

Dimensions (mm)

EHA

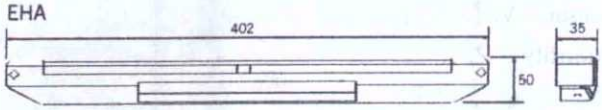

Acoustic Spacer

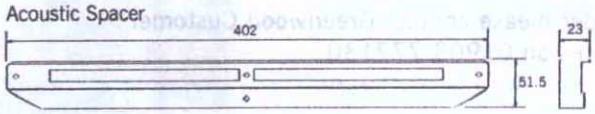

Acoustic Canopy

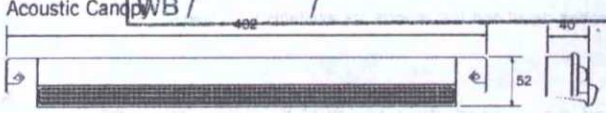

Models and Physical Specification

Model (All separates supplied as complete unit)	Free Area (mm²)	Footprint Dimensions (mm)	Standard Rout Size (mm)	Colour
EHA	4000	420 x 50 x 35		W
Acoustic Spacer	4000	420 x 51.5 x 23	354 / 12	W
Acoustic Canopy	4000	420 x 54 x 49		W

Colour: White (W)

EHA574

Acoustic Humidity Control Ventilator

GREENWOOD AIRVAC Environmental

Product Performance

	Min Airflow m³/h	l/s	Max Airflow m³/h	l/s
Flow rates at 10Pa	3 10	1 3	35 30	10 8
% Relative Internal Humidity*	35%		70%	

*Relative Humidity is the amount of water vapour in the air at any particular temperature compared with the maximum that it will hold at that temperature.

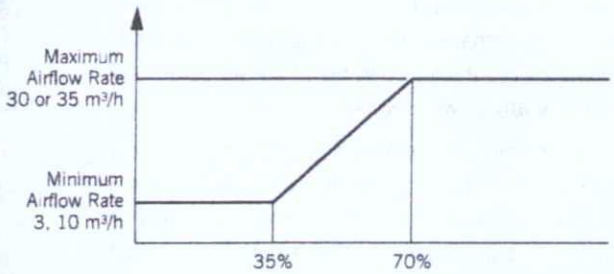

Acoustic Performance

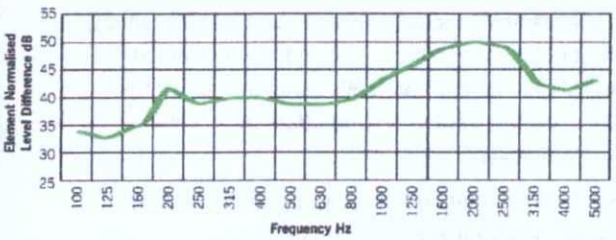

Frequency	100	125	160	200	250	315	400	500
Db	34	33	35	41	39	40	40	39

Frequency	630	800	1000	1250	1600	2000	2500	3150
Db	39	40	43	46	49	50	49	43

Dn,e,w (C;Ctr) = 44(-1;-2) dB

Dn,e,w (C) = 43dB

Dn,e,w (Ctr) = 42dB

Dn,e,w: Average weighted performance across frequency range

C: Pink Noise

Ctr: Road Noise

Full specification detail and test reports are available on request.

Maintenance

Greenwood recommends that any dust be simply removed from the internal mechanism without dismantling.

Installation & Fixing Details

1. Rout slot in window frame 354mm x 12mm.
2. Screw fix acoustic spacer to the internal of the window frame.
3. Screw fix EHA Inlet to the acoustic spacer.
4. Screw fix acoustic canopy to external of window frame.

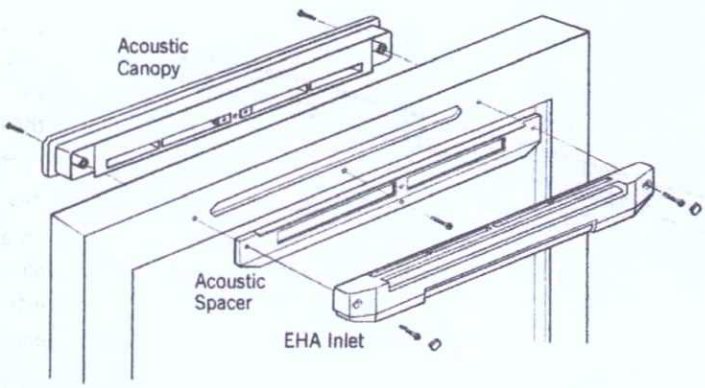

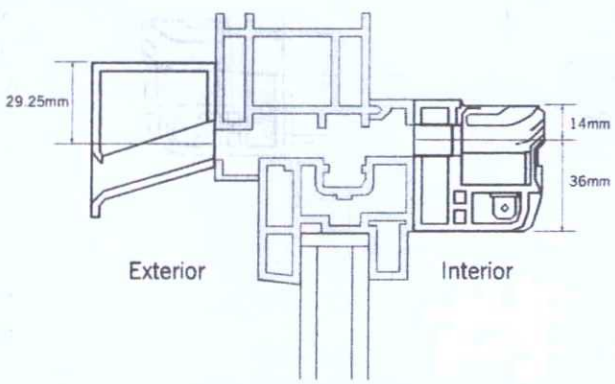

How to order

Please state:

1. **Model** – EHA574
2. **Colour** – W (white)
4. **Quantity** – 25.

EHA 574W x 25

To order please contact Greenwood Customer Services on 01903 777130

Order lead times available on request.

For further information, please contact Greenwood Technical Services on: 01903 777137

All information believed to be correct at the time of going to press. All goods are sold according to Greenwood Air Management Ltd's standard condition of sales that are available on request. All dimensions in millimetres unless otherwise shown. Greenwood Air Management reserves the right to change specifications and prices without prior notice. Registered trademarks and patents protect greenwood products.

GREENWOOD AIR MANAGEMENT
Greenwood Air Management Ltd Brookside Industrial Estate, Rustington, West Sussex BN16 3LH.
Tel: (01903) 771021 Fax: (01903) 782398 Web: www.greenwood.co.uk Email: info@greenwood.co.uk

an Aliaxis company

* SOUNDPROOFING WORKS *

BOROUGH OF WORTHING
DEPOSITED
TP REF No.
LWB/

Performance (▶ Refer to section 3 - Basic principles of system design)

EN

Table 1a – GypWall QUIET SF 70mm, 92mm and 146mm Gypframe 'C' Studs
Solutions to satisfy the requirements of ~~BS EN 1364-1: 1999~~

T.P. OFFICE COPY

1

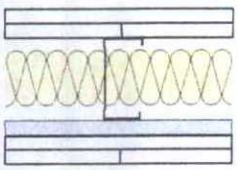

Two layers of board each side of Gypframe 'C' Studs at 600mm centres with Gypframe RB1 Resilient Bar at 600mm centres to one side. 50mm Isover APR 1200 in the cavity. Linings as in table.

2

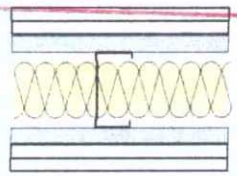

Two layers of board each side of Gypframe 'C' Studs at 600mm centres with Gypframe RB1 Resilient Bar at 600mm centres to both sides. 50mm Isover APR 1200 in the cavity. Linings as in table.

3

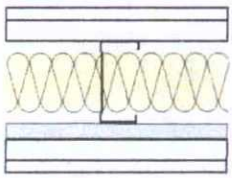

Two layers of board each side of Gypframe 'C' Studs at 600mm centres with Gypframe RB1 Resilient Bar at 600mm centres to one side. 50mm Isover APR 1200 in the cavity. Linings as in table.

Detail	Partition thickness mm	Board type[1]	Lining thickness mm	Stud size mm	Max. partition height[2] mm	Sound insulation R_w (R_w + Ctr) dB	Partition duty	Approx. weight kg/m²	System reference
60 minutes fire resistance EN									
1	138	SoundBloc	2 x 12.5	70	4000	61 (53)	Severe	43	A316008
2	154	SoundBloc	2 x 12.5	70	3200	62 (55)	Severe	43	A316012
1	160	SoundBloc	2 x 12.5	92	5000	61 (53)	Severe	43	A316014
2	176	SoundBloc	2 x 12.5	92	4000	63 (55)	Severe	43	A316015
1	214	SoundBloc	2 x 12.5	146	6800	62 (56)	Severe	43	A316016
2	230	SoundBloc	2 x 12.5	146	5700	64 (58)	Severe	43	A316018
90 minutes fire resistance EN									
1	148	SoundBloc	2 x 15	70	4200	62 (54)	Severe	51	A316009
3	151	Plank + SoundBloc	1 x 19 + 1 x 12.5	70	3700	63 (54)	Severe	54	A316011
2	164	SoundBloc	2 x 15	70	3200	65 (57)	Severe	51	A316013
1	224	SoundBloc	2 x 15	146	5000	62 (57)	Severe	51	A316017
2	240	SoundBloc	2 x 15	146	5000	65 (59)	Severe	51	A316019
120 minutes fire resistance EN									
1	148	FireLine + DuraLine	15 + 15	70	4000	61 (53)	Severe	53	Q606040

[1] For improved durability and impact resistance, the outer layer can be replaced with a layer of 15mm Gyproc DuraLine.
[2] The maximum heights quoted are limited by the fire state field of application or by limiting deflection of L/240 at 200 Pa, whichever is the more onerous.

NB The fire resistance and sound insulation performances are for imperforate partitions, walls and ceilings incorporating boards with all joints taped and filled, or skimmed according to British Gypsum's recommendations. The quoted performances are achieved only if British Gypsum components are used throughout, and the Company's fixing recommendations are strictly observed. Any variation in the specifications should be checked with British Gypsum.

NB For heights between 4200mm and 8000mm, Gypframe Deep Flange Floor & Ceiling Channel should be used at base and at head (subject to deflection criteria).

EXTERNAL WORKS + REPAIRS

D H PROJECTS

T.P. OFFICE COPY

Project Management & Construction

27 Broadwater Road Worthing
West Sussex BN14 8AD
Tel/Fax 01903 535166
Mobile 07881 488911
Email: dan@dhprojects.co.uk
Website: dhprojects.co.uk

BOROUGH OF WORTHING
DEPOSITED
TP REF No.
WB /
/

19 and 21 Chapel road Worthing

Breakdown of external at and above 1st floor level

Scaffolding and licences] At front and rear elevations [not part of PC]

Main pitched roof repairs]
To tiling lead flashings box gutters and dormers

X] Flat roofs] Lead cover flashings
Remove existing roof coverings to all areas, allow too replace decking and lay sheathing felt underlay with 2 coat 20mm asphalt over including angles/skirting/collars and drips
North roof
South roof
Central corridor

Gutters and downpipes] Replace in black plastic

Air conditioning units] Reposition in use units, remove obsolete units
X] Provide acoustic hoods
[Note; R22 refrigerant becoming obsolete should check type]

Rear fire escape at 19] Remove

X] Pest protection] Netting to box gutter, post and spike elsewhere, to main roof only

Decorating and general repairs all elevations]
Walls
Dig out cracks seal and fill with cement based filler,
treat and seal any unstable areas. Wash walls and windows down and paint walls with 2no coats of exterior masonry paint.
Windows and woodwork
Rub down and prepare woodwork prime bear patches with oil based primer
Fill any defects with 2 part wood filler [not major repairs]
Rake out and renew any Defective putties, Undercoat and gloss with exterior quality paint.
Iron work stairs railings and vent pipes,
Prepare and rub down iron work treat rust with an inhibitor
apply 1 coat of micaceous iron oxide and 1 coat of undercoat and gloss

areas highlighted not agreed in tender Total cost

X] =Not quoted in original PC **All prices exclusive of vat**

EXTERNAL JOINERY DETAILS
19 \ 21 CHAPEL ROAD, WORTHING

1:20
ENTRANCE DOOR
NEW FRONT

1:20
REPLACEMENT TIMBER
SLIDING SASH WINDOWS
ON REAR ELEVATION

T.P. OFFICE COPY

BOROUGH OF WORTHING
DEPOSITED
TP REF No.
MB 111

Wayne Garrad MCIAT
Architectural Technologist
38 Durrington Lane
Worthing
West Sussex BN13 2RG
Tel/Fax 01903 695817