Residential Development of a detached house at 72 Old Fort Road, Shoreham Beach, BN43 5HA

November 2019
Drawing no:JB 400/ GA 70

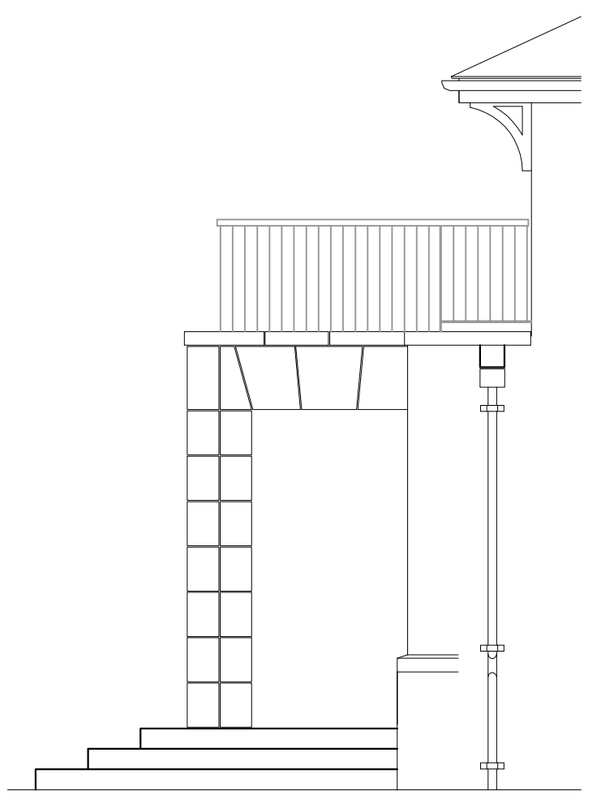

SIDE ELEVATION 1:50



FRONT (NORTH) FACING ELEVATION 1:50

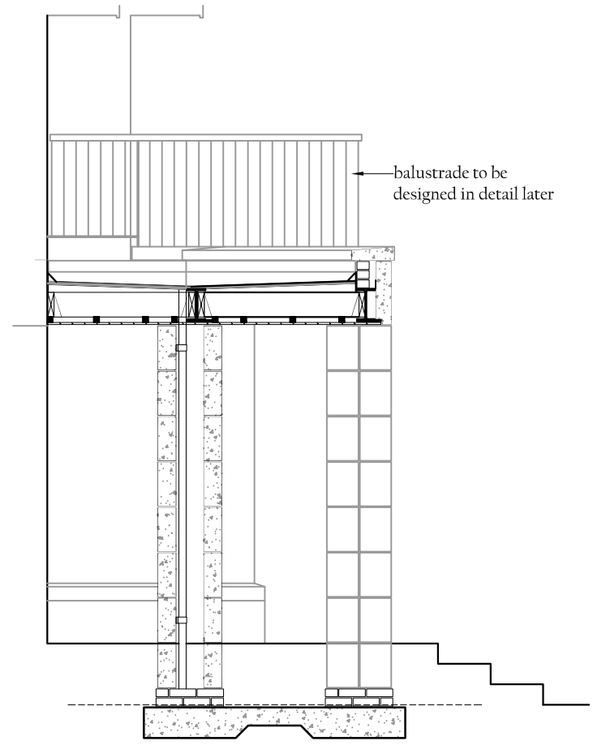

SECTION 1:50

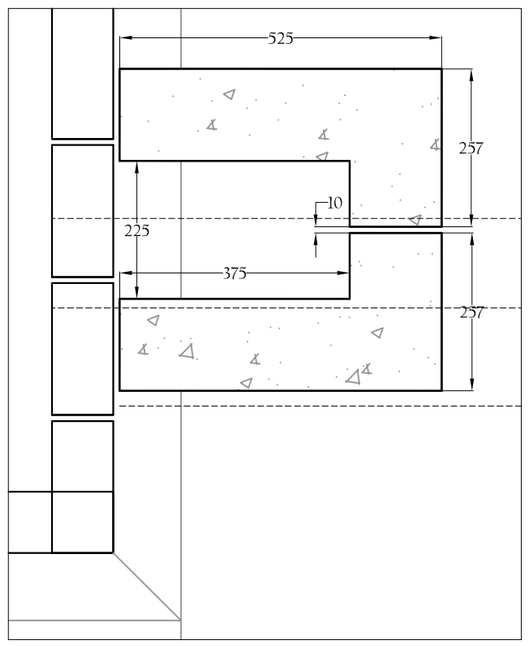

DETAIL 'A' 1:10

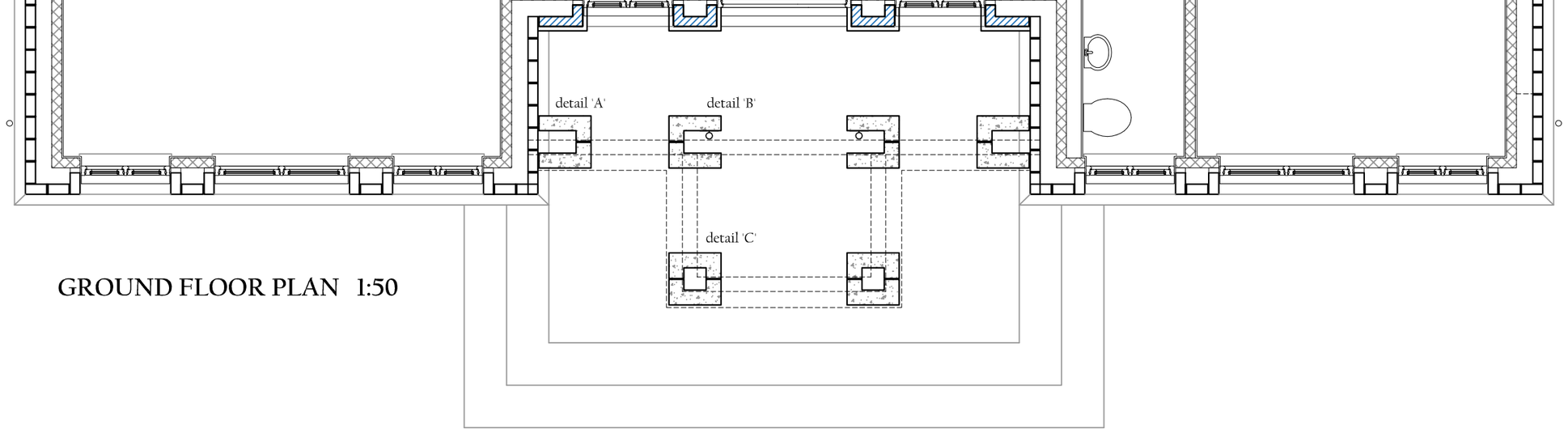

GROUND FLOOR PLAN 1:50

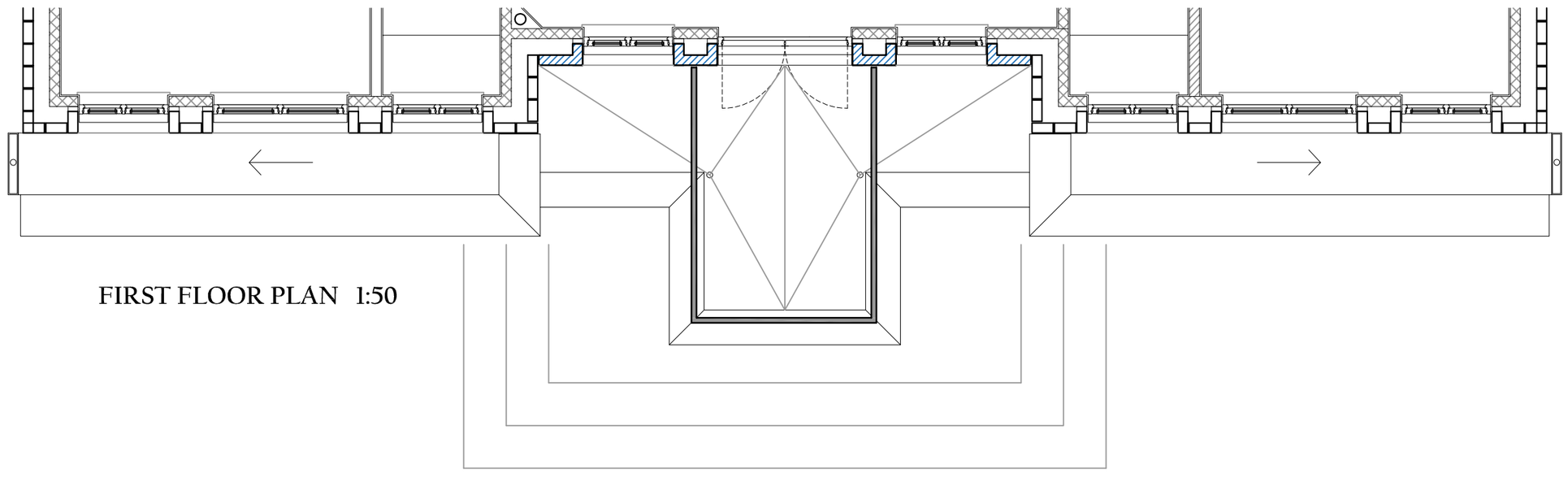

FIRST FLOOR PLAN 1:50

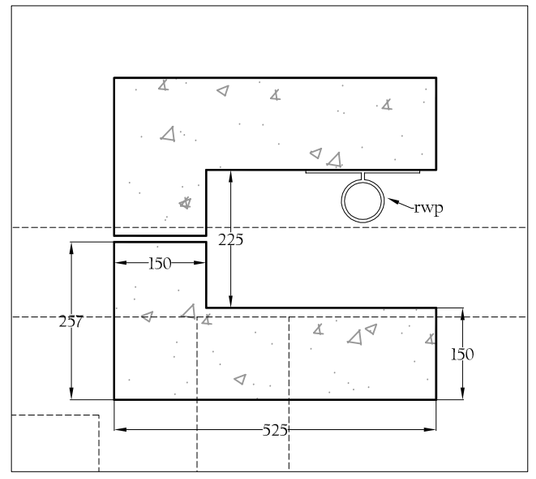

DETAIL 'B' 1:10

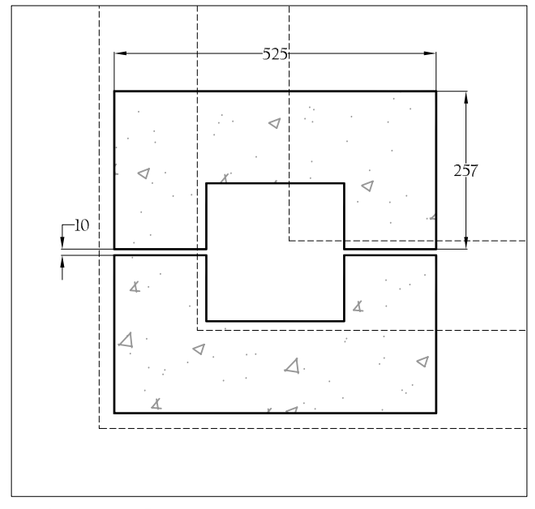

DETAIL 'C' 1:10

0 1 2 3 4 5

SCALE BAR 1:50

JAMES BRECKELL : ARCHITECT : ARB : RIBA
Adur Business Centre, Little high Street, Shoreham by Sea, BN43 5EG, Tel 01273 467 621, Email: james@breckell.co.uk