PLANNING
PLAN No. Aragon2d08
29 FEB 2008

Application for Planning Permission
Town and Country Planning Act 1990

Publication of planning applications on council web sites
Please note that with the exception of applicant contact details and Certificates of Ownership, the information provided on this application form and in supporting documents may be published on the council's website.
If any other information that is provided as part of the application which falls within the definition of personal data under the Data Protection Act and is not to be published on the council's website, please contact the council's planning department.

1. Applicant Name, Address and Contact Details

Title: Ms | First name: Helen | Surname: Scott

Company name: Satellite Information Services

Street address: Whitehall avenue
Kingston

Town/City: Milton Keynes
County: Bucks
Country: United Kingdom
Postcode: MK10 0AD

	Country Code	National Number	Extension Number
Telephone number:	[redacted]	[redacted]	
Mobile number:			
Fax number:			

Email address:

Are you an agent acting on behalf of the applicant? (•) Yes ( ) No

2. Agent Name, Address and Contact Details

Title: Mrs | First Name: Helen | Surname: Caldwell

Company name: aragon planning T2 ltd

Street address: The Hollies

Town/City: Flitton
County: Beds
Country: United Kingdom
Postcode: MK45 5ED

	Country Code	National Number	Extension Number
Telephone number:	01525	864971	
Mobile number:			
Fax number:			

Email address: helen@aragonland.co.uk

3. Description of the Proposal

Please describe the proposed development including any change of use:
Installation of satellite dish

Has the building, work or change of use already started? ( ) Yes (•) No

4. Site Address Details

Full postal address of the site (including full postcode where available)

House: 50 Suffix:

House name:

Street address: North Road

Town/City: LANCING

County: West Sussex

Postcode: BN15 9AB

Description of location or a grid reference
(must be completed if postcode is not known):

Easting: 518262

Northing: 104567

Description:

5. Pre-application Advice

Has assistance or *prior* advice been sought from the local authority about this application? ○ Yes ◉ No

6. Pedestrian and Vehicle Access, Roads and Rights of Way

Is a new or altered vehicle access proposed to or from the public highway? ○ Yes ◉ No

Is a new or altered pedestrian access proposed to or from the public highway? ○ Yes ◉ No

Are there any new public roads to be provided within the site? ○ Yes ◉ No

Are there any new public rights of way to be provided within or adjacent to the site? ○ Yes ◉ No

Do the proposals require any diversions/extinguishments and/or creation of rights of way? ○ Yes ◉ No

7. Waste Storage and Collection

Do the plans incorporate areas to store and aid the collection of waste? ○ Yes ◉ No

Have arrangements been made for the separate storage and collection of recyclable waste? ○ Yes ◉ No

8. Neighbour and Community Consultation

Have you consulted your neighbours or the local community about the proposal? ○ Yes ◉ No

9. Council Employee / Member

Is the applicant or agent related to any member of staff or elected member of the council? ○ Yes ◉ No

10. Materials

Please state what materials (including type, colour and name) are to be used externally (if applicable):

Others - description:

Type of other material: satellite dish

Description of *existing* materials and finishes:

Not applicable

Description of *proposed* materials and finishes:

Painted white dish and galvanised steel brackets

Are you supplying additional information on submitted plan(s)/drawing(s)/design and access statement? ○ Yes ◉ No

11. Vehicle Parking

Please provide information on the existing and proposed number of on-site parking spaces:

Type of vehicle	Existing number of spaces	Total proposed (including spaces retained)	Difference in spaces

12. Foul Sewage

Please state how foul sewage is to be disposed of:

Mains sewer [X] Package treatment plant [ ] Unknown [ ]

Septic tank [ ] Cess pit [ ]

Other

Are you proposing to connect to the existing drainage system? ○ Yes ○ No ◉ Unknown

13. Assessment of Flood Risk

Is the site within an area at risk of flooding? Refer to the Environment Agency's Flood Map showing flood zones 2 and 3 and consult Environment Agency standing advice and your local planning authority requirements for information as necessary. ○ Yes ◉ No

If Yes, you will need to submit an appropriate flood risk assessment to consider the risk to the proposed site.

Is your proposal within 20 metres of a watercourse (e.g. river, stream or beck)? ○ Yes ◉ No

Will the proposal increase the flood risk elsewhere? ○ Yes ◉ No

How will surface water be disposed of?

[ ] Sustainable drainage system [ ] Main sewer [ ] Pond/lake

[ ] Soakaway [ ] Existing watercourse

14. Biodiversity and Geological Conservation

Is there a reasonable likelihood of the following being affected adversely or conserved and enhanced within the application site, OR on land adjacent to or near the application site:

a) Protected and priority species

○ Yes, on the development site ○ Yes, on land adjacent to or near the proposed development ◉ No

b) Designated sites, important habitats or other biodiversity features

○ Yes, on the development site ○ Yes, on land adjacent to or near the proposed development ◉ No

c) Features of geological conservation importance

○ Yes, on the development site ○ Yes, on land adjacent to or near the proposed development ◉ No

15. Existing Use

Please describe the current use of the site:

vacant

Is the site currently vacant? ◉ Yes ○ No

If Yes, please describe the last use of the site:

shop

When did this use end (if known) (DD/MM/YYYY)?

Does the proposal involve any of the following:

Land which is known to be contaminated? ○ Yes ◉ No

Land where contamination is suspected for all or part of the site? ○ Yes ◉ No

A proposed use that would be particularly vulnerable to the presence of contamination? ○ Yes ◉ No

Application advice

If you have said Yes to any of the above, you will need to submit an appropriate contamination assessment.

16. Trees and Hedges

Are there trees or hedges on the proposed development site? ○ Yes ◉ No

And/or: Are there trees or hedges on land adjacent to the proposed development site that could influence the development or might be important as part of the local landscape character? ○ Yes ◉ No

If Yes to either or both of the above, you will need to provide a full Tree Survey with accompanying plan before your application can be determined. Your Local Planning Authority should make clear on its website what the survey should contain, in accordance with the current 'BS5837: Trees in relation to construction - Recommendations'

17. Trade Effluent

Does the proposal involve the need to dispose of trade effluents or waste? ○ Yes ◉ No

18. Residential Units

Does your proposal include the gain or loss of residential units? ○ Yes ◉ No

19. All Types of Development: Non-residential Floorspace

Does your proposal involve the loss or gain of non-residential floorspace? ○ Yes ◉ No ○ Unknown

20. Employment

If known, please complete the following information regarding employees:

	Full-time	Part-time	Equivalent number of full-time
Existing employees	0	0	0
Proposed employees	0	0	0

21. Hours of Opening

If known, please state the hours of opening for each non-residential use proposed:

Use	Monday to Friday Start Time	Monday to Friday End Time	Saturday Start Time	Saturday End Time	Sunday and Bank Holidays Start Time	Sunday and Bank Holidays End Time	Not Known
A2							☒

22. Site Area

What is the site area? 12.00 sq.metres

23. Industrial or Commercial Processes and Machinery

Please describe the activities and processes which would be carried out on the site and the end products including plant, ventilation or air conditioning. Please include the type of machinery which may be installed on site:

Not applicable

Is the proposal for a waste management development? ○ Yes ◉ No

24. Hazardous Substances

Is any hazardous waste involved in the proposal? ○ Yes ◉ No

25. Site Visit

Can the site be seen from a public road, public footpath, bridleway or other public land? ○ Yes ◉ No

If the planning authority needs to make an appointment to carry out a site visit, whom should they contact? (Please select only one)

◉ The agent ○ The applicant ○ Other person

26. Certificates (Certificate A)

Certificate of Ownership - Certificate A

Town and Country Planning (General Development Procedure) Order 1995 Certificate under Article 7

I certify/The applicant certifies that on the day 21 days before the date of this application nobody except myself/ the applicant was the owner (owner is a person with a freehold interest or leasehold interest with at least 7 years left to run) of any part of the land or building to which the application relates.

Title: Mrs First name: Helen Surname: Caldwell

Person role: Agent Declaration date: 28/02/2008 ☒ Declaration made

26. Certificates (Agricultural Holdings Certificate)

Agricultural Holding Certificate

Town and Country Planning (General Development Procedure) Order 1995 Certificate under Article 7

Agricultural Land Declaration - You Must Complete Either A or B

(A) None of the land to which the application relates is, or is part of an agricultural holding.

Title: Mrs First name: Helen Surname: Caldwell

Person role: Agent Declaration date: 28/02/2008 ☒ Declaration Made

(B) I have/The applicant has given the requisite notice to every person other than myself/the applicant who, on the day 21 days before the date of this application, was a tenant of an agricultural holding on all or part of the land to which this application relates, as listed below:

Notice recipient	Date notice served

Title: Mrs First Name: Helen Surname: Caldwell

Person role: Agent Declaration date: 28/02/2008 ☒ Declaration Made

27. Declaration

I/we hereby apply for planning permission/consent as described in this form and the accompanying plans/drawings and additional information. ☒

Date 28/02/2008

Design and Access Statement

Introduction

In May 2006 the government introduced changes to the planning system and particularly changes to the development control system. One of the requirements from the Circular 08/2005, and titled Guidance on the changes to the development control system is that certain types of planning application require a design and access statement.

The DCLG Circular 01/2006 Guidance on Changes to the Development Control System, Section 2 details the changes to the OUTLINE planning permission process. The amendments are to articles 1 and 3 of the GDPO.

The statement can be linked to the decision by virtue of any planning conditions. It is recognised that the design and access statement must be proportionate to the proposal.

National Design Guidance

The Government is committed to good design through the policies in PPS 1, PPS 3 (Housing), PPG 13 and a number of supplementary planning documents. In setting out the Government's Objectives for the Planning System PPS 1 states,

> **Planning should facilitate and promote sustainable and inclusive patters or urban and rural development by (amongst other things) ensuring high quality development through good and inclusive design and the efficient use of resources.**

The key principles of design are stated in paragraph 13 of PPS 1. They include,

> **Planning policies should promote high quality inclusive design in the layout of new developments and individual buildings in terms of impact, not just the short term but over the lifetime of the development. Design which fails to take the opportunities available for improving the character and quality of an area should not be accepted.**

Paragraph 34 of PPS 1 introduces two design tests. Namely that design should be appropriate for the context and design should provide an opportunity to provide an improvement to improve character, functionability, and the quality of the area.

The matters to consider in achieving good design quality are detailed in paragraph 16. Having regard to the conversion scheme a number of the indents are relevant. For example the site is well located to take advantage of community facilities and services, particularly public transport. The design will provide considerable improvement to the character of the built form. The intention of the proposal is to retain the character and appearance of the existing building. The existlnq openings utilised and the form of the building is retained. The layout seeks to use the existing floor space and provide for starter units of accommodation.

The site has limited opportunity for landscaping and no details of any landscaping are Submitted.

PPS 1, paragrapgh 33 requires that

...DISTRICT COUNCIL
PLANNING DIVISION
PLAN NO A06/2008
DATE RECEIVED 29 FEB 2008

Good design ensures attractive usable, durable and adaptable places and is a key element in achieving sustainable development. Good design is indivisible from good planning

It adds,

Planning authorities should plan positively for the achievement of high quality and inclusive design for all development ...'Good design should contribute positively to making places better for people. Design which is inappropriate in its context, or which fails to take the opportunities available for improving the character and quality of an area and the way it functions, should not be accepted.

Telecommunications Advice

Further advice for telecommunications is contained in PPG 8. National policy recognises the importance of good communications and specific advice on satellite television is contained in paragraphs 32-33. The location of the dish is generally dictated to by the line of sight to the geo satellite emitting the signal. A larger dish is need in the more westerly and northerly parts of the country. It is imperative for a betting shop (A2) that they have this facility and it can be a material consideration for the need for the satellite (paragraph 53).

This is a statement to be read in conjunction with the application for the satellite dish. The dish is required to receive signals from a satellite located above the earth. The dish must have a line of sight with the satellite. This limits the location and position of the dish due to its requirement to have a line of sight.

The satellite dish itself receives signals from dishes that are fixed or mobile and are typically located at sports venues throughout Europe and the USA. It is important that the pictures and information are relayed reliably and without any time delay into the bookmaker.

The Proposal

The dish is located on the rear of the building A number of photographs are submitted and they show the position of the dish, see photograph Plan 3. The dish is located as a pole mount. Plan 4 shows a block plan

Appearance

The dishes are slightly larger than a typical household dish due to the volume of information and the technical information that is supplied with the pictures from the events. The information supplied by the dish must be constant and to ensure uninterrupted service. It is for this reason that the size of the dish is fixed.

In terms of colouration the normal dish is white and the accompanying bracketry is galvanised steel. White is normally considered recessive; however the dish can be painted other British standard colours as can the bracketry if this is considered to be necessary.

These type of installations are now accepted as features in street scenes and are part of the street scene and urban context in most towns.

Landscaping

No landscaping is proposed simply because it could hinder the line of site and render the installation and service delivery of the signal unworkable.

Access

The access to and from the building is not altered or changed and neither are the parking arrangements. The proposal does not change the existing access arrangements and therefore the relevant policy basis remains unaffected

DA 6

Francis Caldwell BA (Hons) M.Phil MRTPI Managing Partner
Aragon Land and Planning UK LLP and Aragon T2 Ltd Aragon Lodge1 The Avenue Flitwick BEDS MK45 5ED

PLANNING D SION
PLAN No. Ardo120108
DATE RECEIVED 29 FEB 2008

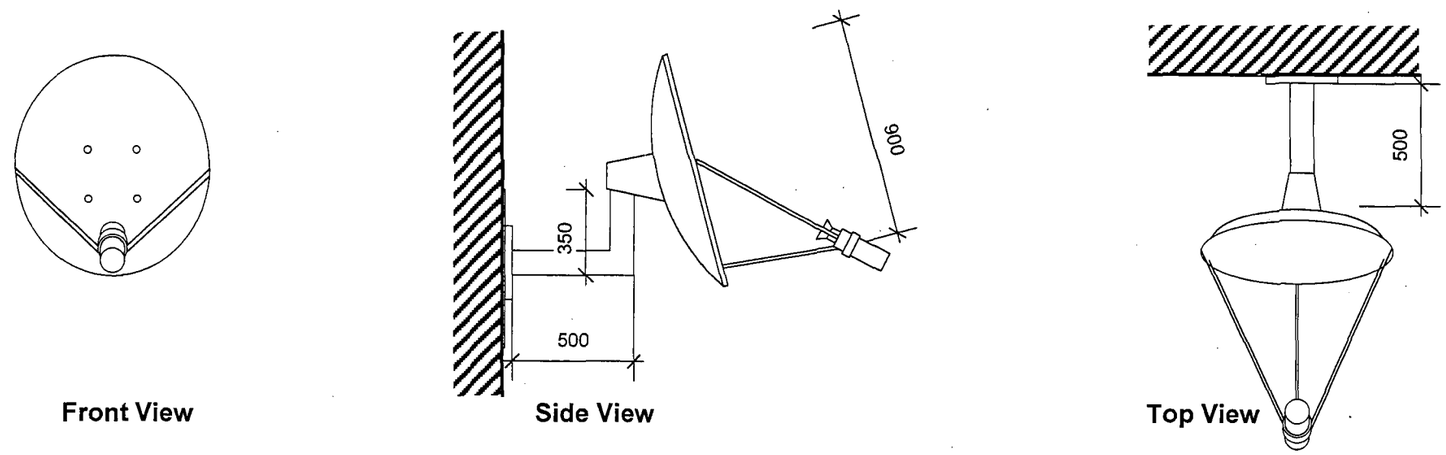

Front View

Side View

Top View

THE ANTENNA ARE WHITE IN COLOUR ALUMINIUM/ALLOY CONSTRUCTION WITH GALVANISED STEEL BRACKETRY

900mm Dia - SATELLITE DISH FIXED ON WALL - PLAN No. SIS 1

Scale 1:25

DUR DISTRICT COUNCIL
PLANNING DIVISION
PLAN No. A0061 2008
DATE
29 FEB 2008



© Crown Copyright 2008. All rights reserved Licence number 100020449. Plotted Scale - 1:1250

SR 27023


N
Scale 1:500
6.3m
Depot
75
71
73
67
69
63a
65
63
59
61
55
57
53
Bank
47
45
43
41
39
37
6.2m
31
25
1
Queensway
7
15
50
48
DISH
PLANNING DIVISION
PLAN No
DATE
29 FEB 2008
40
Post Office
PO
Bank
38
36
34
32
5

PHOTOGRAPHS FOR - SR 27023

SURVEY NUMBER: 086257

SATELLITE OPTION: 03: SURVEY SITE

PHOTOGRAPH: 01: FRONT ELEVATION (CAMERA)



COMMENTS

Plan 1

Front Elevation

DUR DISTRICT COUNCIL
PLANNING DIVISION
PLAN No. Ax0120108
DATE 29 FEB 2008

PHOTOGRAPH: 12: NEW DISH POSITION (EDITED)



COMMENTS

Plan 3

Rear Elevation

Proposed Satellite Dish 5M From Ground level

Dish + bracket 1.5m

OUR DISTRICT COUNCIL
PLANNING DIVISION
PLAN No. Ancl012068
DATE 29 FEB 2008

PHOTOGRAPH: 05: SIDE ELEVATION (CAMERA)



COMMENTS

Plan 2

Side Elevation

DISTRICT COUNCIL
PLANNING DIVISION
PLAN No. A3d012008
DATE 29 FEB 2008