





STANDARD ELEVATION DOUBLE CLASSROOM
AS PROPOSED AT 1:100
PLANNING

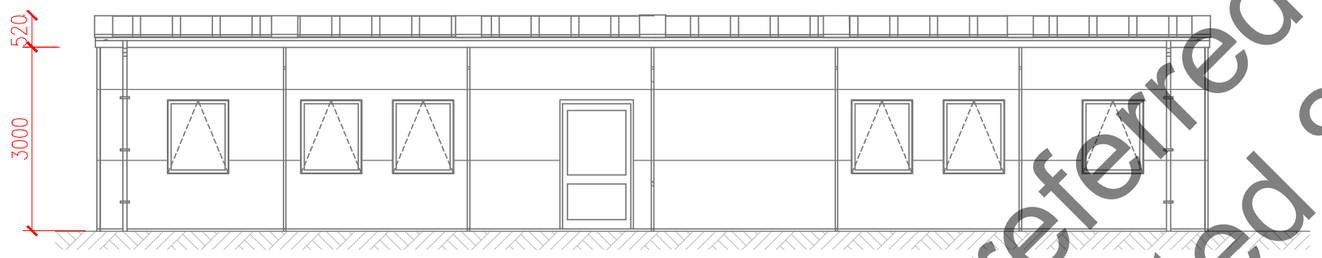

FRONT ELEVATION

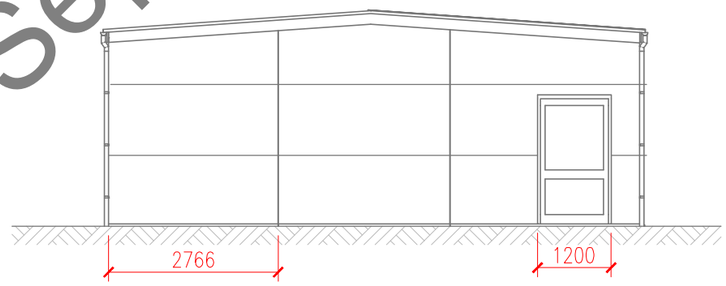

SIDE ELEVATION

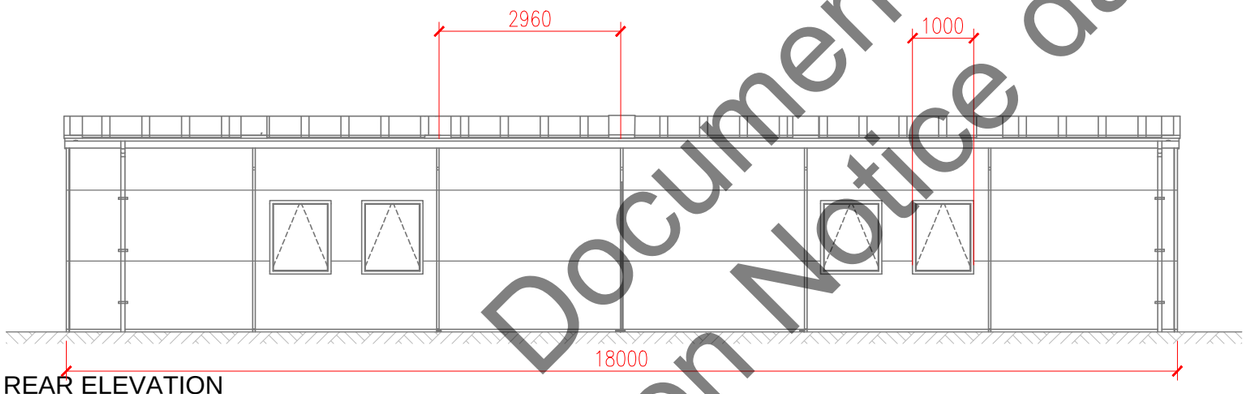

REAR ELEVATION

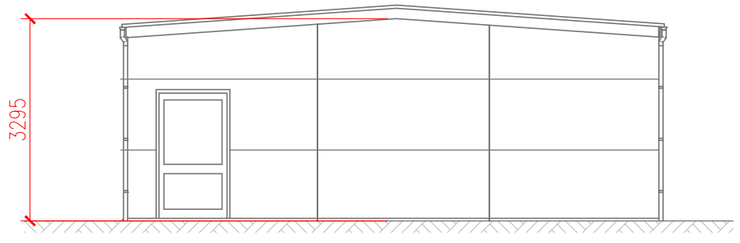

SIDE ELEVATION

Document referred to in
Decision Notice dated 8 Sept 2016

WSCC VARIOUS SCHOOLS

NOTES:

Report all discrepancies, errors and omissions
Do not scale from this drawing.
Verify all dimensions on site before commencing any work or preparing shop drawings.
All materials, components and workmanship are to comply with all the relevant British Standards, Codes of Practice, and appropriate manufacturers recommendations that from time to time shall apply.
For all specialist work, see relevant drawings.

This drawing and design are copyright of PELLINGS LLP

Rev	Date	Description	Name
-	--/--/--		

Pellings

Pellings LLP
24 Widmore Road Bromley Kent BR1 1RY
t 020 8460 9114 f 020 8313 0019 e bromley@pellings.co.uk
www.pellings.co.uk

Architecture & Planning ■ Building Surveying ■ Project Management ■ Cost Consultancy ■ CDM Co-ordination

CLIENT: WSCC WEST SUSSEX COUNTY COUNCIL
PROJECT: NEW MODULAR UNIT CLASSROOM
TITLE: DOUBLE MODULAR UNIT ELEVATIONS AS PROPOSED
DATE: 14/06/16 | SCALE: 1:100 @A3 | DRAWN: JF | CHK:
DRAWING No: 250|017|004 P