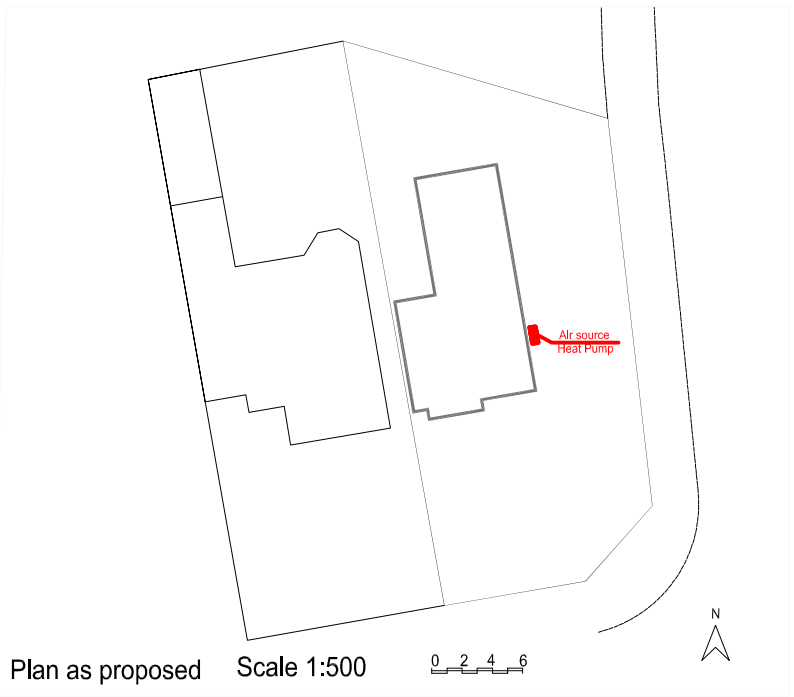

Plan as proposed Scale 1:500 0 2 4 6

Air Source Heat Pump Dimensions 12 kW

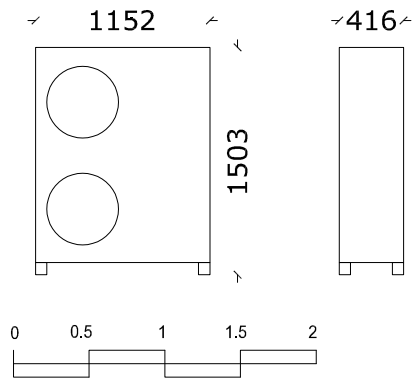

Scale 1:50

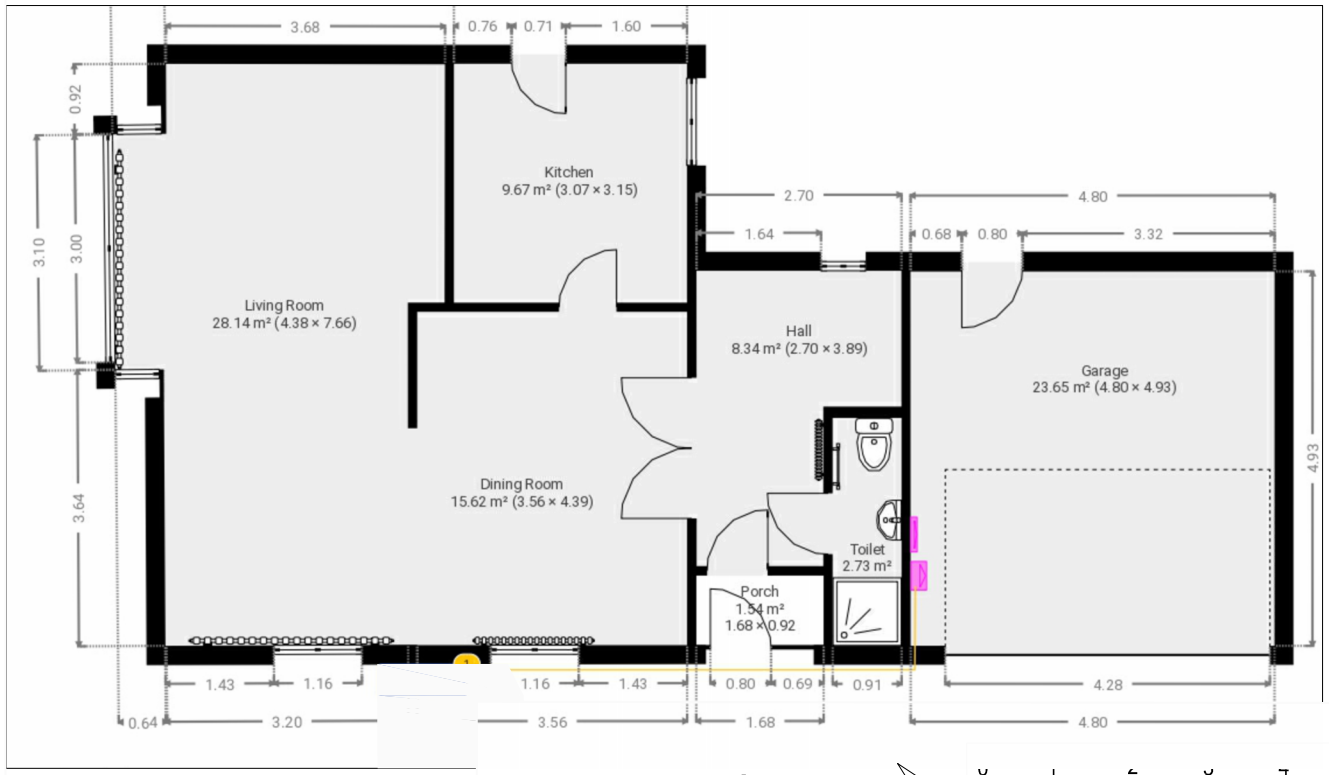

Plan as Existing Scale 1:100 0 1 2 3 4 5



Location of air source heat pump as existing



Location of air source heat pump as existing



Location of air source heat pump as proposed



Location of air source heat pump as proposed

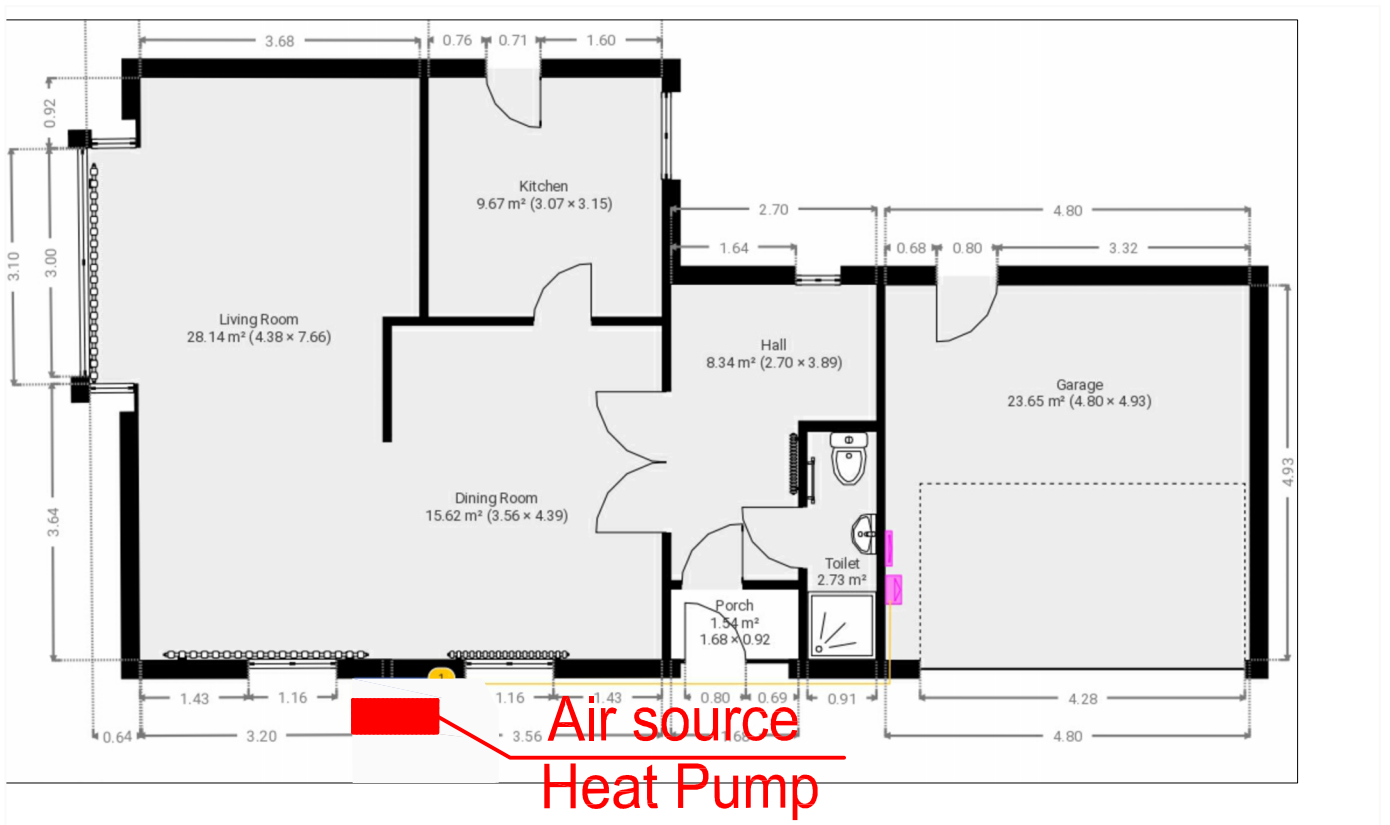

Plan as Proposed Scale 1:100 0 1 2 3 4 5

AIRA

AIRA, 2nd Floor,
Noah's Yard, York Way,
London, N1 9AA

0330 822 5493
hello@airahome.com
www.airahome.com

	Project Status: PLANNING	Scale: various @ A3	Drawn: F. Sgroi	Checked:
Site Address: 172 Alinora Crescent, Goring-by-Sea, WORTHING, BN12 4HW	Title: EXISITNG and PROPOSED PLANS & PHOTOMONTAGES	Drawing No. AIRA _2408_1002		Rev.