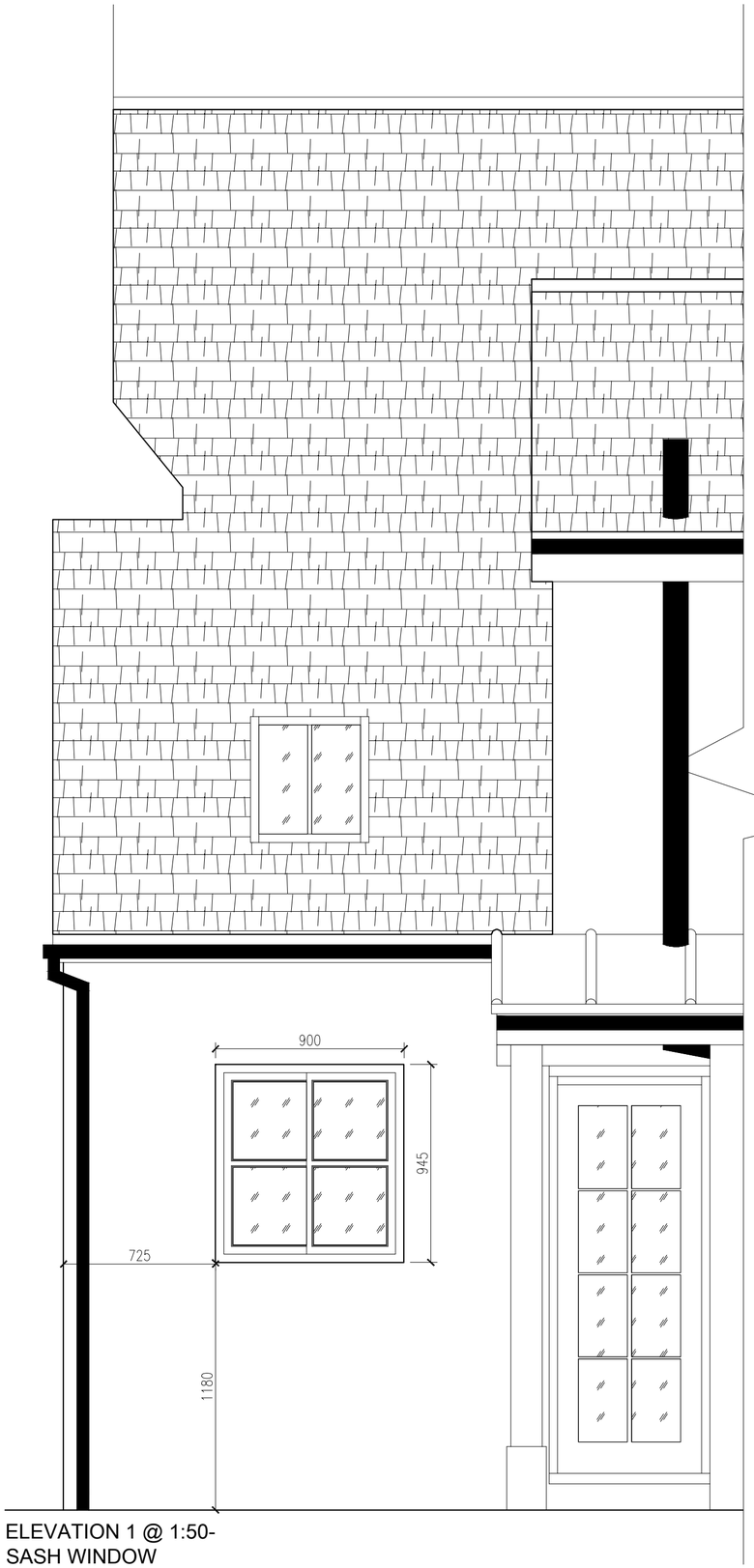

ELEVATION 1 @ 1:50-
SASH WINDOW

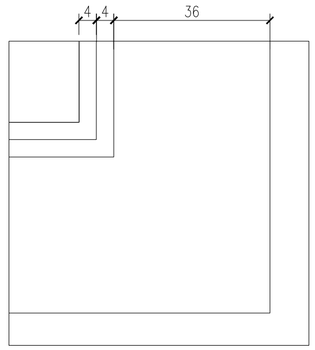

DETAIL 1 @ 1:1-
SASH WINDOW

Measurements of frame lining detail may change to match that of original upstairs window.

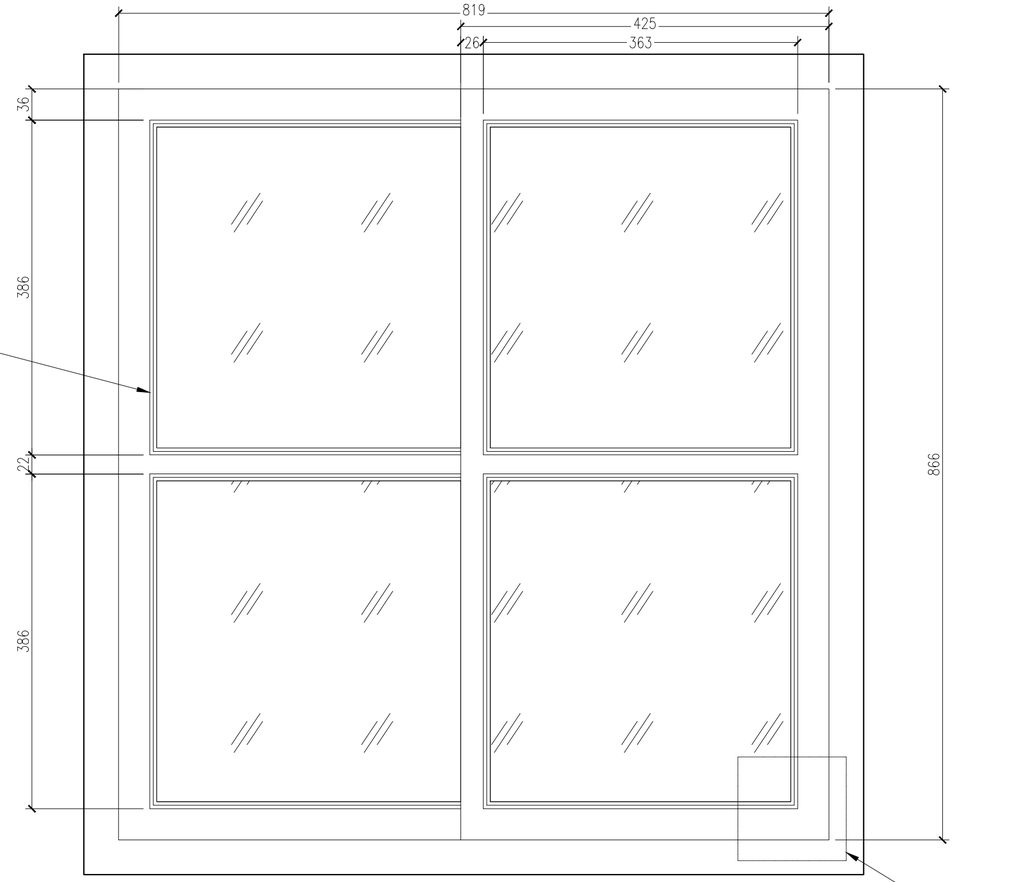

ELEVATION 2 @ 1:5-
SASH WINDOW

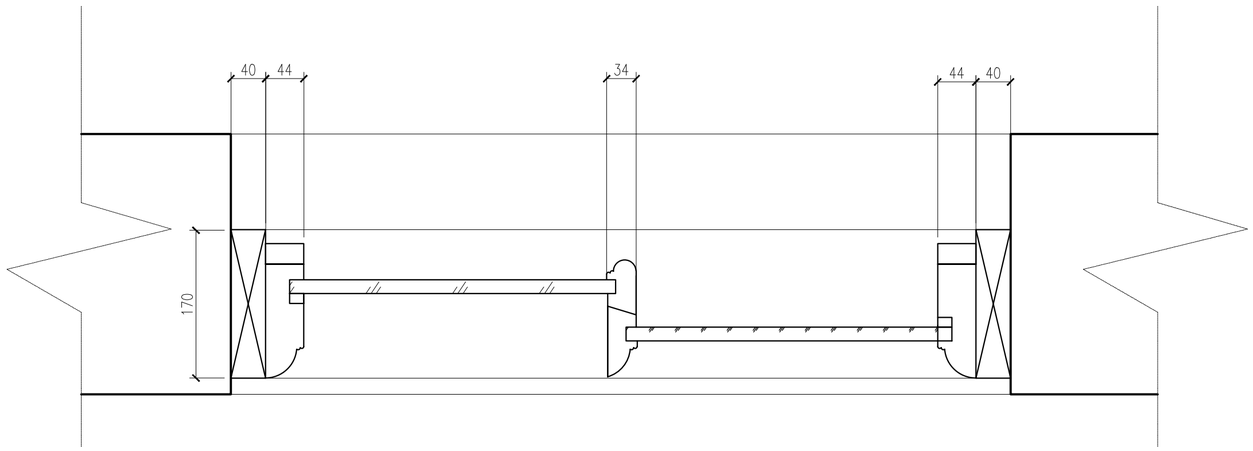

SECTION @ 1:5-
SASH WINDOW

No.	Description	Date
Amendments:		

Address:	45 The Green Southwick BN42 4FY	Client: Ms Mills	
Drawing Title:	Kitchen Sash WIndow	Drawing Ref.:	LH/03/Green45

Planning Applications
Building Regulation Drawings
Design Consultants
Party Wall Surveyors
Building Surveys/ Homebuyers Survey

Project Management
Disabled Access Auditing
Bulding Defect Analysis
CDM
Expert Witness

Contact Details:	Telephone: 01273 415940	Email: mark@grumittwade.com
Contact Address:	Unit 3, Tungsten Building, George Street, Hove, BN41 1RA	

Scale:		Paper: A2	Date: Dec 2018	Revision No:	
Elevation 1 - 1:50 Detail - 1:1	Section - 1:5 Elevation 2 - 1:5				