0 10 MILLIMETRES 100

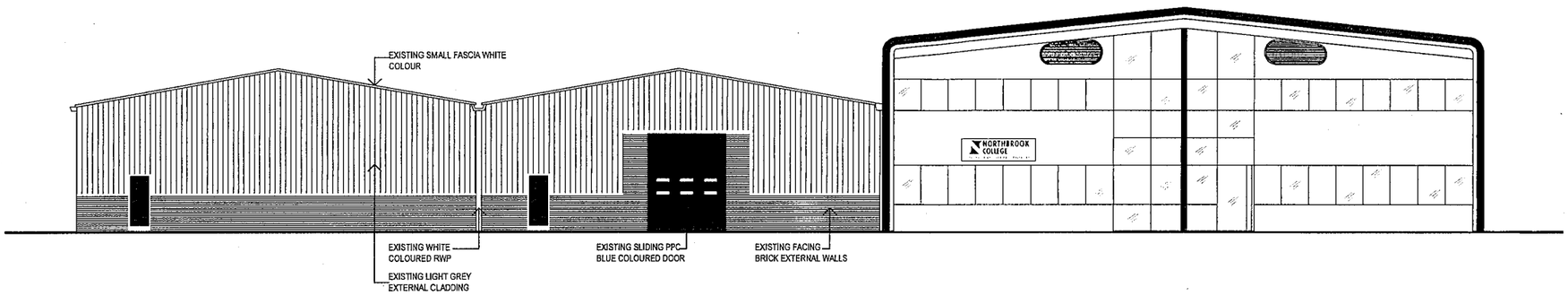

EXISTING SOUTH ELEVATION

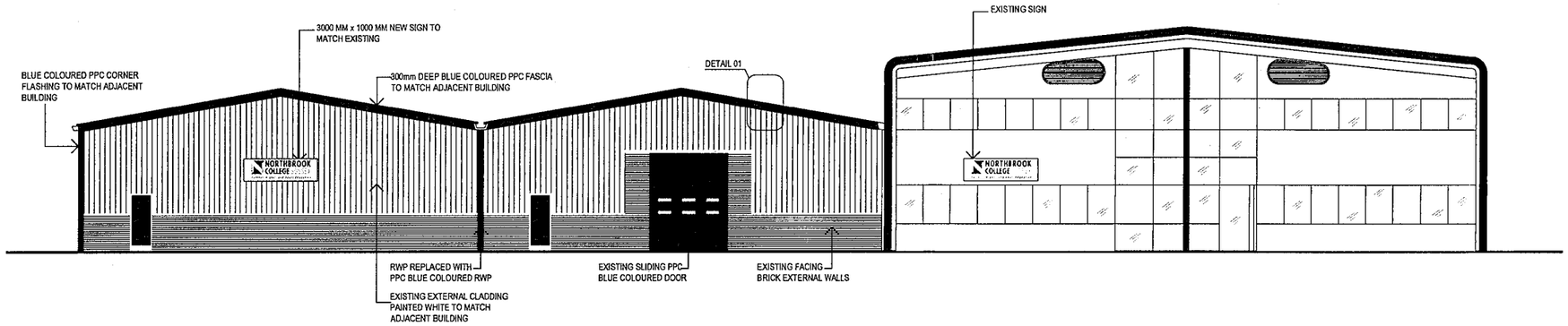

PROPOSED SOUTH ELEVATION
SHOWING NEW BLUE FACIA
AND SIGN

PAINTING EXISTING CLADDING :

ENSURE SURFACE IS THOROUGHLY CLEANED AND FREE FROM DIRT, DUST AND GRIME
- APPLY 1 LAYER OF DULUX TRADE ULTRA GRIP PRIMER
- APPLY 2 LAYERS OF DULUX HAMMERITE WHITE SATIN

APPLY THE ABOVE IN FULL ACCORDANCE WITH MANUFACTURERS WRITTEN INSTRUCTIONS

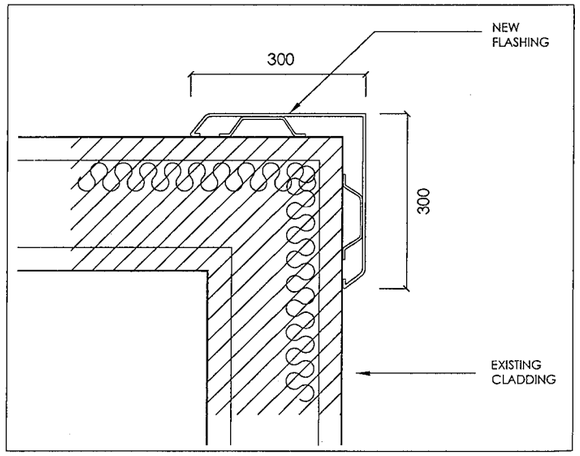

01 NEW FLASHING DETAIL
Scale 1:5

ATKINS

NOTES

1. DO NOT SCALE FROM THIS DRAWING.
2. ALL MEASUREMENTS ARE IN MILLIMETRES UNLESS STATED OTHERWISE.
3. THIS DRAWING IS TO BE READ IN CONJUNCTION WITH THE SPECIFICATION AND ALL RELEVANT ARCHITECTURAL, ELECTRICAL, MECHANICAL AND STRUCTURAL DRAWINGS.

ADUR DISTRICT COUNCIL
PLANNING DIVISION
PLAN No. A/0283/09
DATE 29 JUL 2009

IN ADDITION TO THE HAZARDS/RISKS NORMALLY ASSOCIATED WITH THE TYPES OF WORK DETAILED ON THIS DRAWING, NOTE THE FOLLOWING SIGNIFICANT RESIDUAL RISKS :-

ITEM	HAZARD	RISK

REV	DESCRIPTION	BY	DATE	CHKD	AUTH
T1	ISSUE FOR TENDER	GP	29/06	KD	29/06

ATKINS
Atkins Limited
Oakbrook
Oasis Business Park
Eynsham, Oxford
OX29 4AH
England
Telephone +44(0)1865 882 828
Fax +44(0)1865 883 060

CLIENT: NORTHBROOK COLLEGE SUSSEX
Further, Higher and Adult Education

PROJECT: NORTHBROOK COLLEGE SUSSEX
SHOREHAM AIRPORT SITE

TITLE: WORKSHOP ELEVATIONS
AS EXISTING & PROPOSED

SCALE:	ORIGINAL SIZE:	DESIGNED:	DRAWN:	CHECKED:	AUTHORISED:
1:100	A1	-	MH	GP	KD
	OFFICE: OXF	DATE: -	DATE: 05/09	DATE: 29/06	DATE: 29/06

PROJECT NO:	DISCIPLINE:	TYPE:	CODE:	DRG NO:	REV:
5076658	A	E	_	03	T1

5076658 / A / E / _ / 03 / T1
PROJECT NO. / DISCIPLINE / TYPE / CODE / DRG NO. / REV.