H.M. LAND REGISTRY		TITLE NUMBER WSX 146290	
ORDNANCE SURVEY PLAN REFERENCE	TQ 1303	SECTION D	Scale 1/1250
COUNTY WEST SUSSEX	DISTRICT WORTHING		© Crown copyright 1980



ANCHOR
STAYING PUT.

MRS. B. DEADMAN.
195A. TARRING ROAD.
WORTHING.
BN 11 4 HH.

PROPOSED REPLACEMENT WINDOWS.

LOCATION PLAN.
SCALE 1:1250.

DRAWING Nº 3457/3.
MARCH 2008.

FILED PLAN H.M. L R REGISTRY

BOROUGH OF WORTHING
DEPOSITED 11/4/08
WB/ 08/0688/FUL

T.P. OFFICE COPY

WORTHING BOROUGH COUNCIL
- 7 APR 2008
CONSENT GRANTED SUBJECT TO CONDITIONS

This official copy is issued, and shows the state of this title plan, on 10 March 2008 at 14:12:28.
It is admissible in evidence to the same extent as the original (s.67 Land Registration Act 2002).
This title plan shows the general position, not the exact line, of the boundaries. It may be subject to distortions in scale. Measurements scaled from this plan may not match measurements between the same points on the ground. See Land Registry Public Guide 19 - Title Plans and Boundaries.
This title is dealt with by Land Registry, Portsmouth Office.
© Crown Copyright. Produced by Land Registry. Reproduction in whole or in part is prohibited without the prior written permission of Ordnance Survey. Licence Number 100026316.



T.P. OFFICE COPY
BOROUGH OF WORTHING
11/4/08
WB/ 08/0398/FUL
WORTHING BOROUGH COUNCIL
- 2 JUN 2008
CONSENT GRANTED
SUBJECT TO CONDITIONS
ETON ROAD
ANCHOR
STAYING PUT.
MRS. B. DEADMAN.
195 A. TARRING ROAD.
WORTHING.
BN 11 4 HN.
PROPOSED
REPLACEMENT
WINDOWS.
BLOCK PLAN.
SCALE 1:500
DRAWING Nº 3457/2
MARCH 2008.

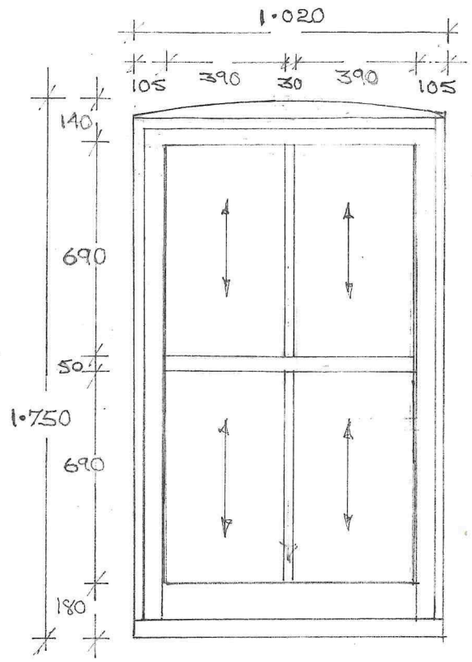

SOUTH ELEVATION
BEDROOM.

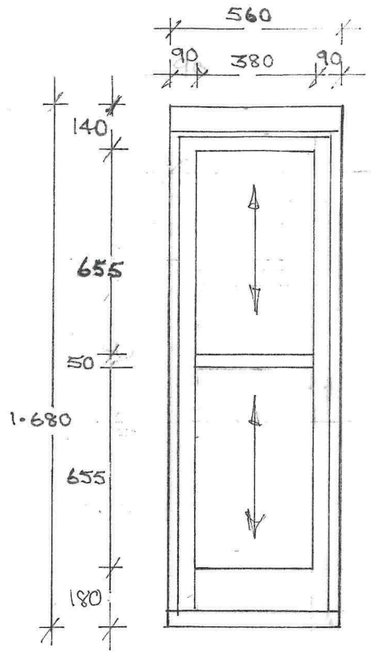

WEST ELEVATION
SHOWER ROOM.

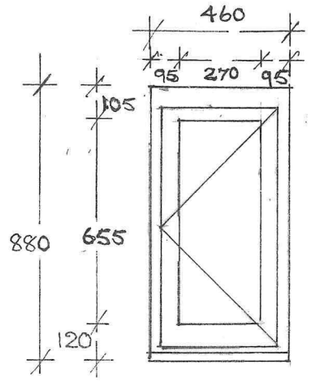

WEST ELEVATION
WC.

EXISTING WINDOWS.

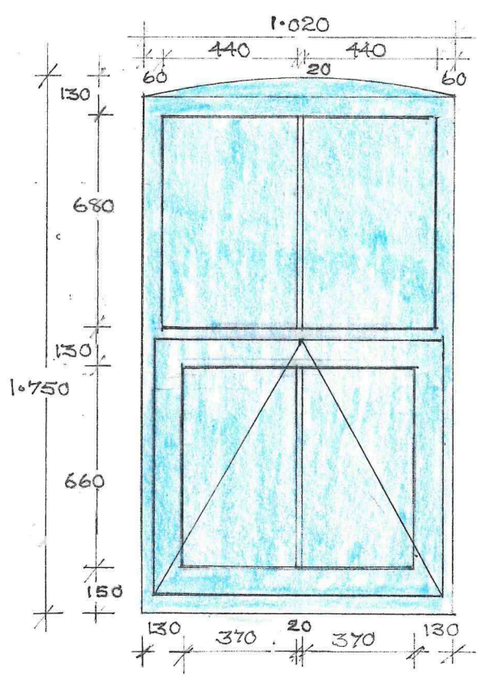

SOUTH ELEVATION
BEDROOM.

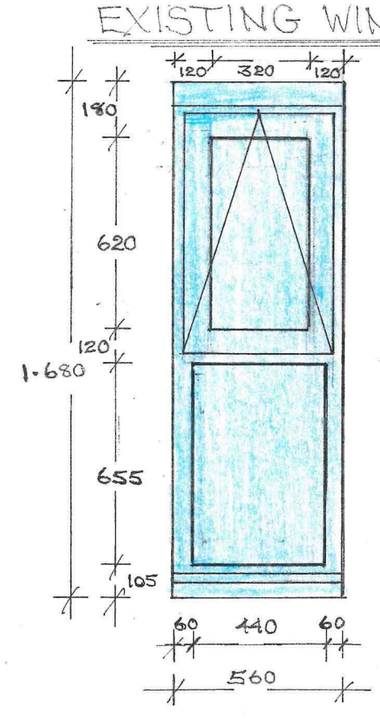

WEST ELEVATION
SHOWER ROOM.

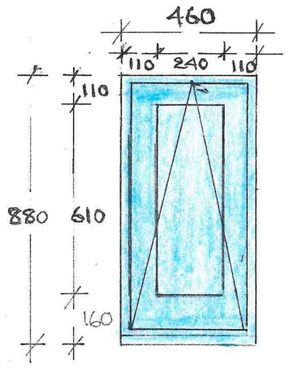

WEST ELEVATION
WC.

PROPOSED WHITE UPVC WINDOWS

T.P. OFFICE COPY

Please be advised that this drawing remains the intellectual property of Anchor Trust until completion of works as agreed in the 'Agreement to Provide the Staying Put service' and/or all monies due to Anchor have been paid in full.

REVISED PLAN

BOROUGH OF WORTHING
DEPOSITED 13/5/08
TP REF NO
WB / 08 / 0398/FUL

WORTHING BOROUGH COUNCIL
- 2 JUN 2008
CONSENT GRANTED
SUBJECT TO CONDITIONS

REVISIONS.

A. MAY 2008.
WINDOWS REDRAWN TO CORRECT ERRORS.

MRS. DEADMAN.
195 A. TARRING ROAD.
WORTHING
BN 11 4HN.

PROPOSED REPLACEMENT WINDOWS TO WHITE UPVC.

Scale 1:20
Date MARCH 08
Drawn D.A. KNAPP.

3457

1. 'A'

Anchor Staying Put, Arun & Worthing
3 Churchill Court
112 The Street
Rustington
BN16 3DA
Tel: 01903 788 440

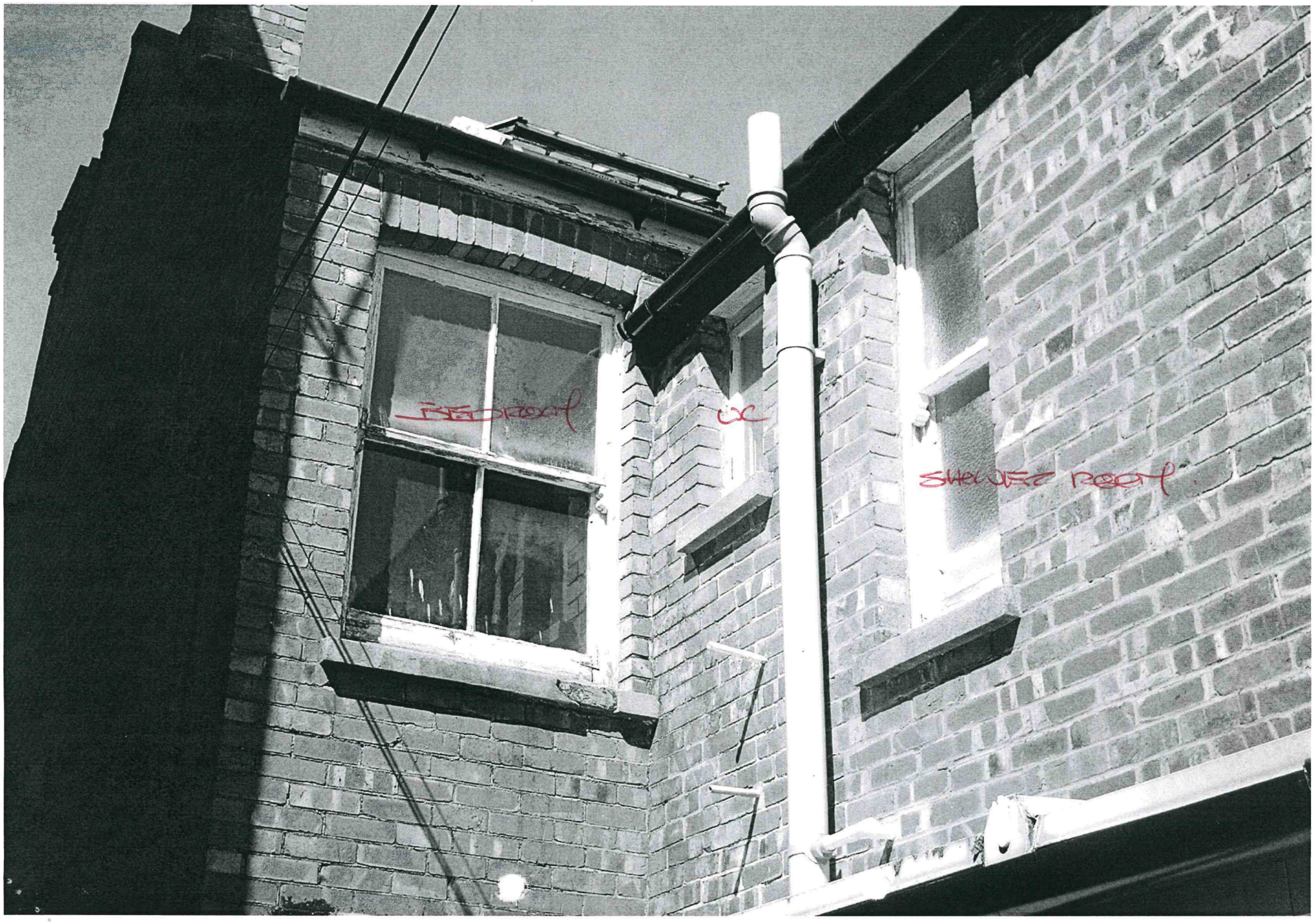
BEDROOM
SHOWER ROOM