EXAMPLE OF EXISTING WINDOWS

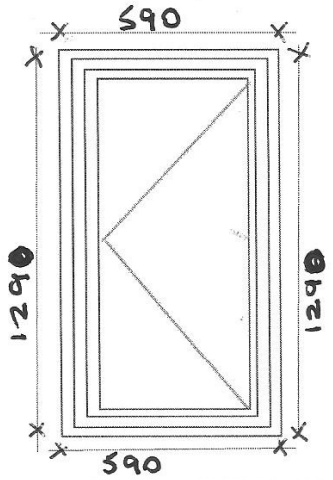

1. Lounge (clear glazing)

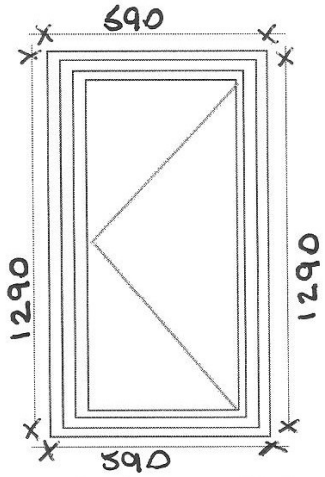

2. Bedroom side (clear glazing)

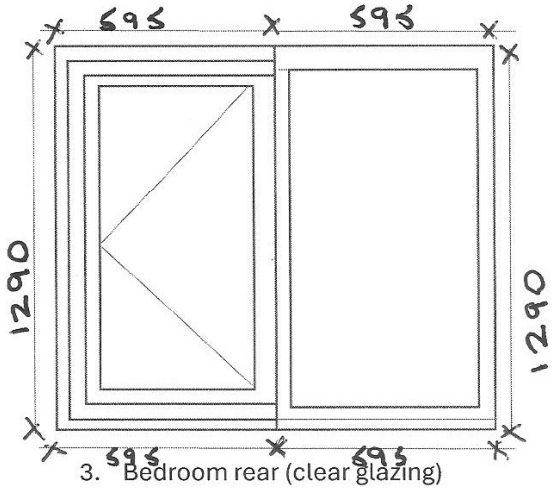

3. Bedroom rear (clear glazing)

EXAMPLE OF EXISTING WINDOWS

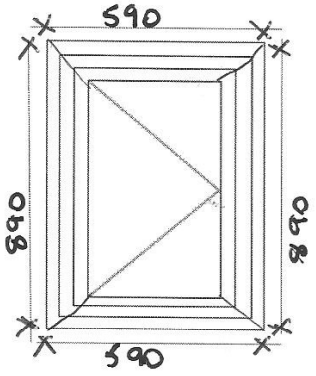

4. Bathroom (obscured glazing)

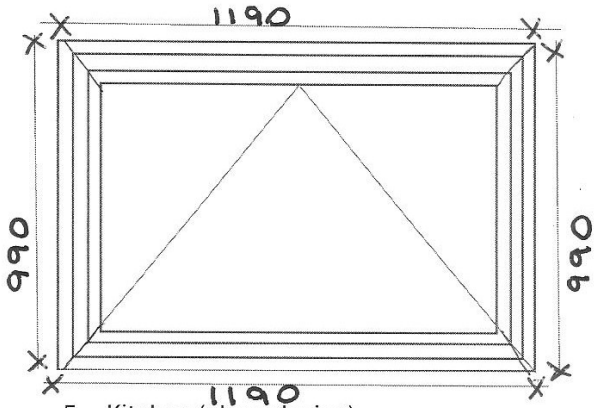

5. Kitchen (clear glazing)

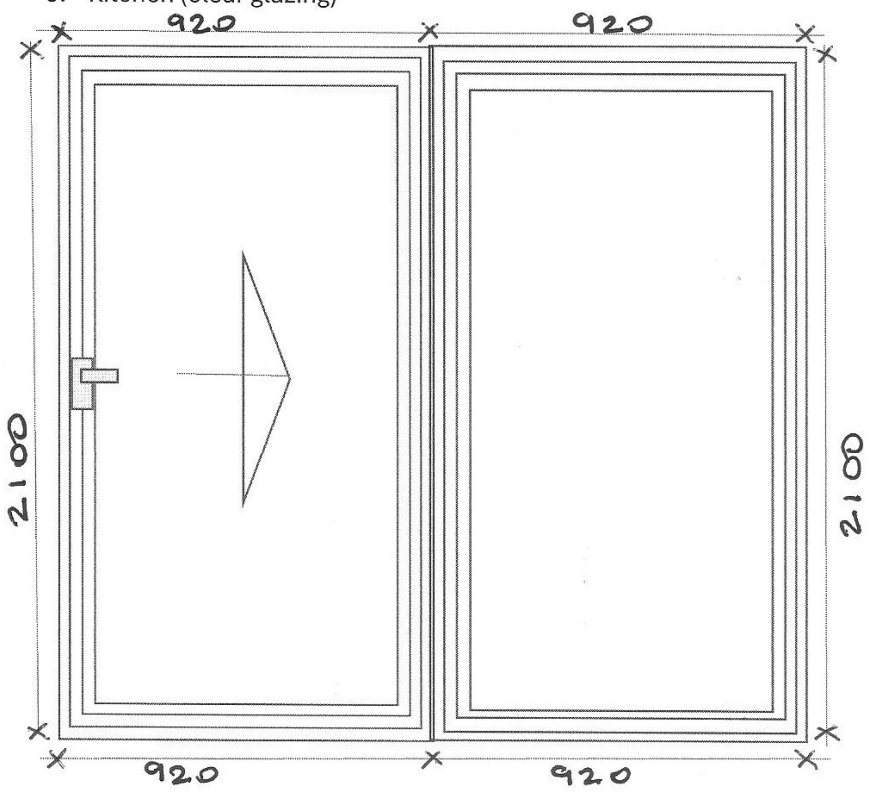

6. Lounge (clear glazing)