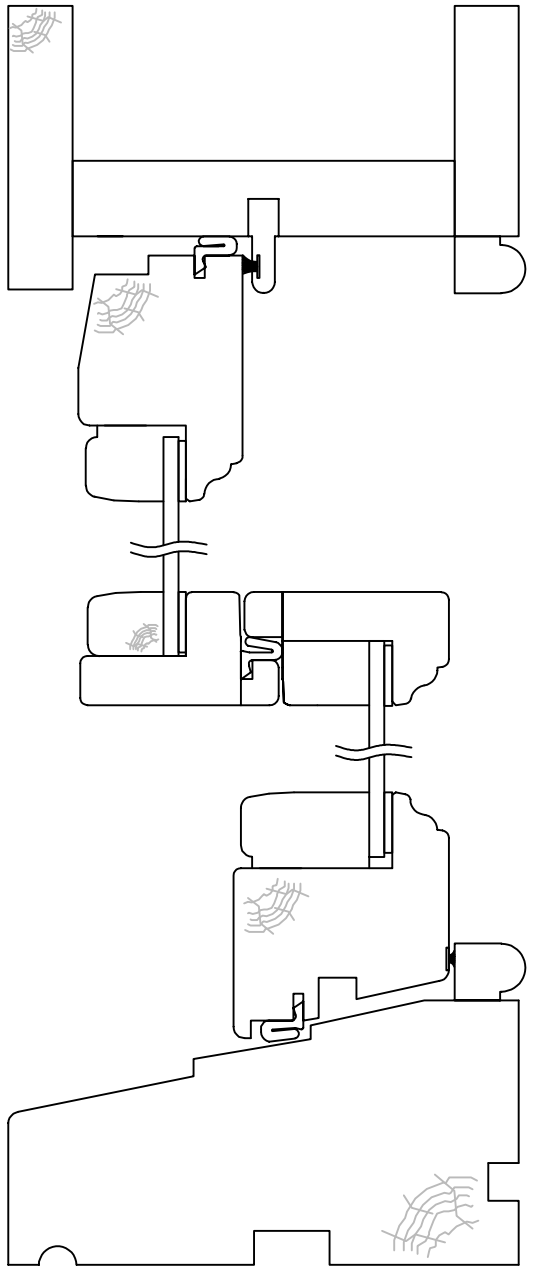

SECTION A

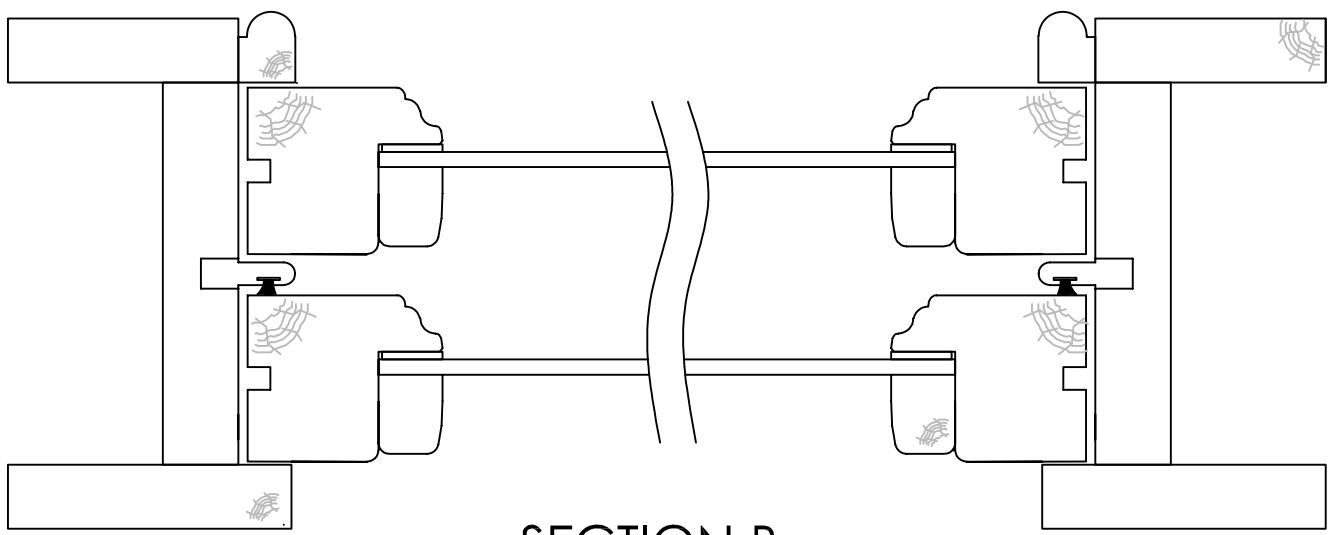

SECTION B

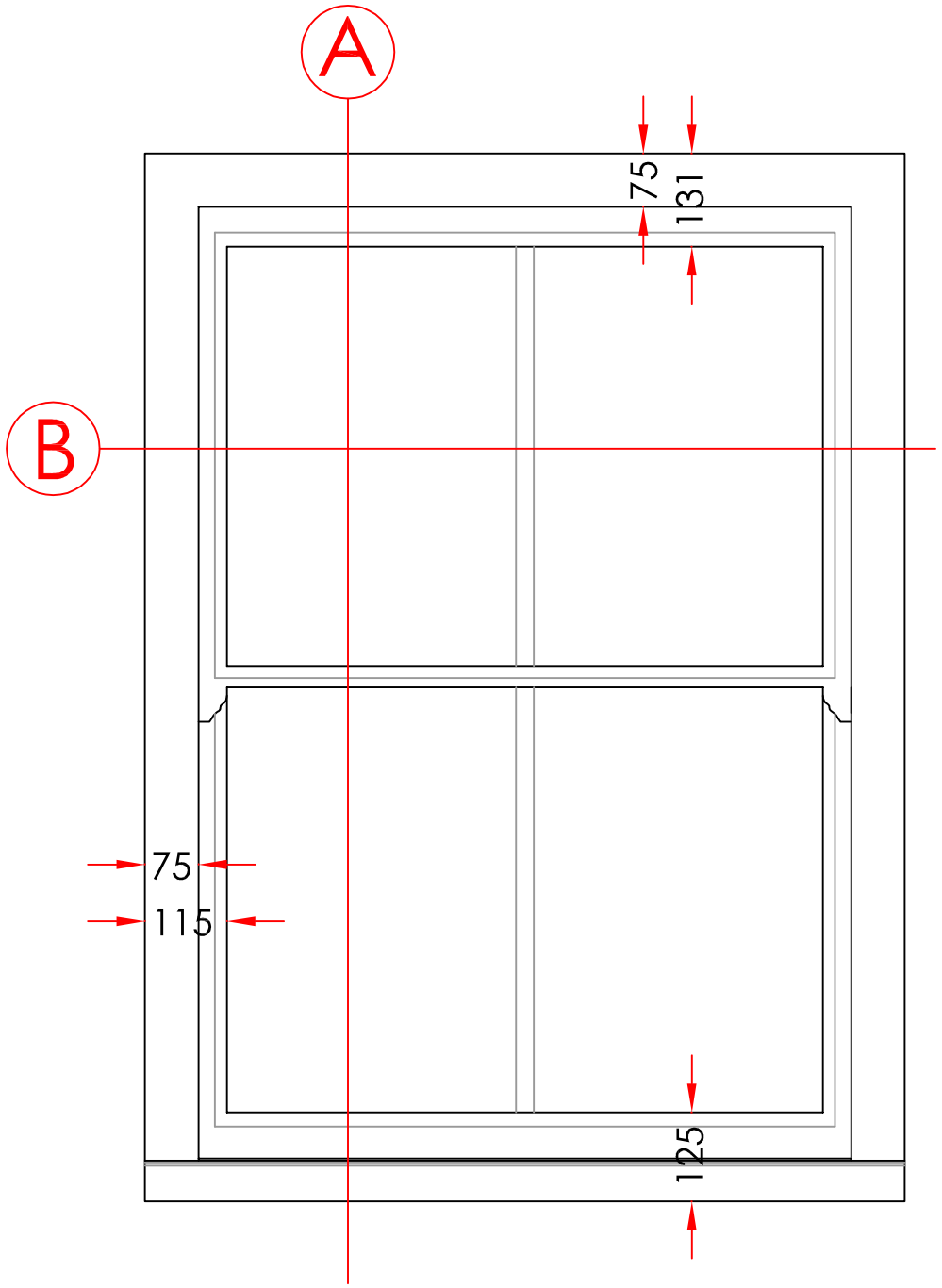

3. MUSIC ROOM

EXISTING

SECTIONS - 1:2
ELEVATIONS- 1:10
(PRODUCED ON A3 PAPER)

CONTRACT No.: 01687904 **date:** 11/04/2011

PROPOSED: PROPOSED WINDOW REPLACEMENT

AT: (INSTALLATION ADDRESS) 402 GUILDBOURNE COURT
GUILDBOURNE CENTRE
WORTHING
WEST SUSSEX, BN11 3EH

FOR:..... MISS WARD

Drawers Initials.
AA

Anglian Home Improvements
CONSERVATORIES DIVISION
TELEPHONE: 0845 437 3600
FACSIMILE: 01603 480101