EXISTING - BATHROOM

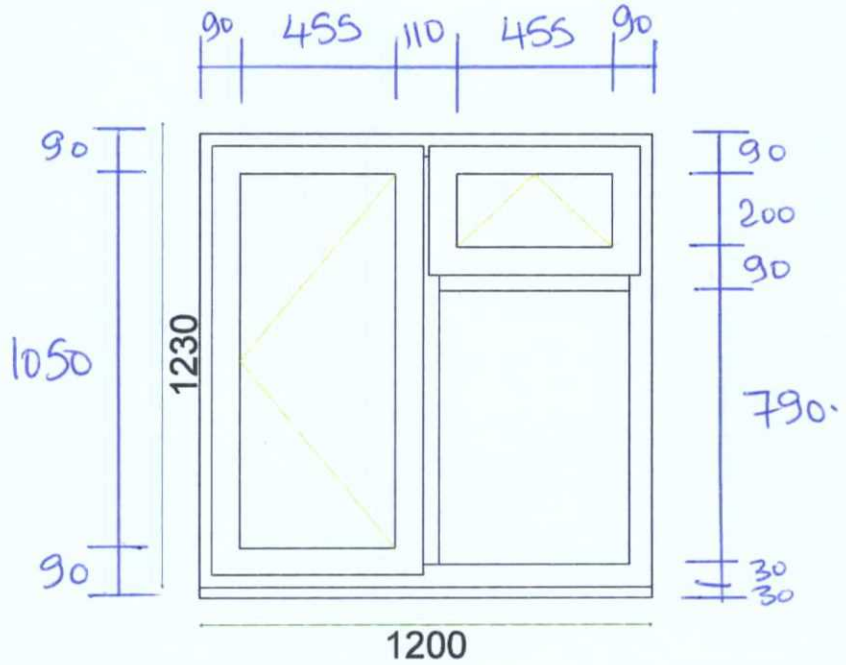

Scale - 1:20

Cash Sale

QUOTE NO: 012110
REF: Mrs Moon-Williams

Fair Trade Windows Ltd
11 Peter Road
Lancing Business Park
Lancing, West Sussex, BN15 8TH
TEL: 01903 765508
FAX: 01903 765073

Proposed Bathroom

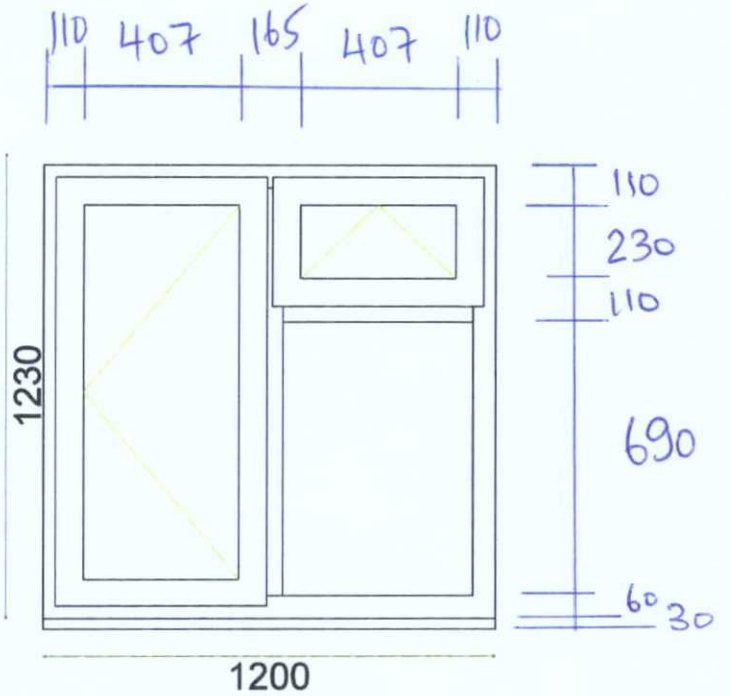

WORTHING BOROUGH COUNCIL
- 7 JAN 2008
CONSENT GRANTED
SUBJECT TO CONDITIONS

Scale - 1:20

Cash Sale

QUOTE NO: 012110
REF: Mrs Moon-Williams

Fair Trade Windows Ltd
11 Peter Road
Lancing Business Park
Lancing, West Sussex, BN15 8TH
TEL: 01903 765508
FAX: 01903 765073

EXTENSION STUDY

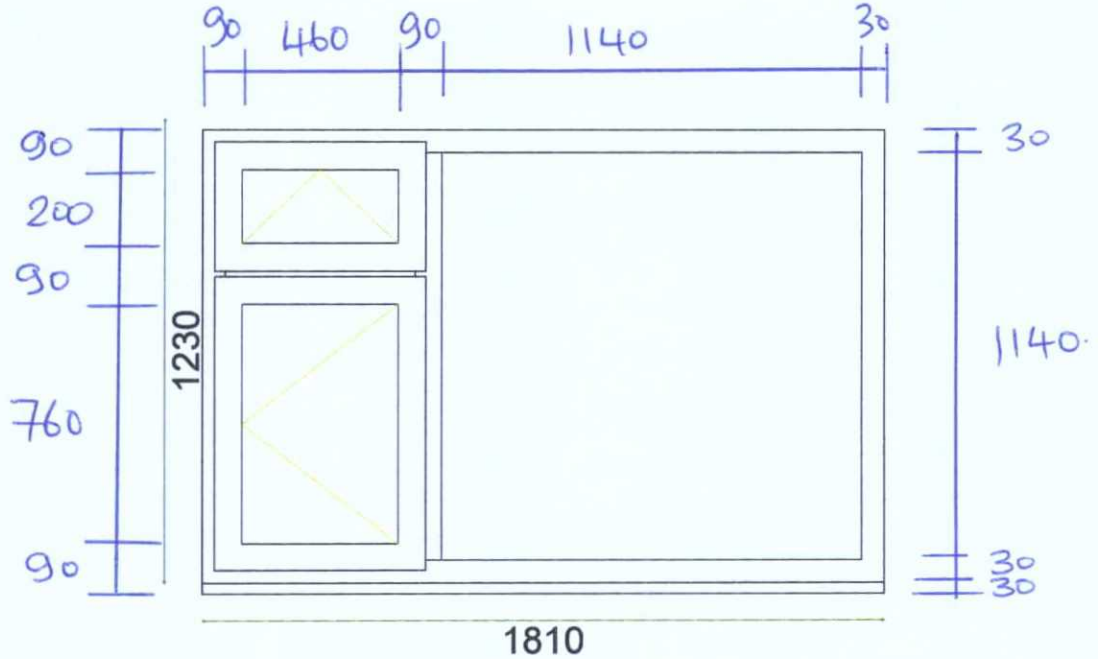

Scale - 1:20

Cash Sale

QUOTE NO: 012110
REF: Mrs Moon-Williams

Fair Trade Windows Ltd
11 Peter Road
Lancing Business Park
Lancing, West Sussex, BN15 8TH
TEL: 01903 765508
FAX: 01903 765073

Proposed Study

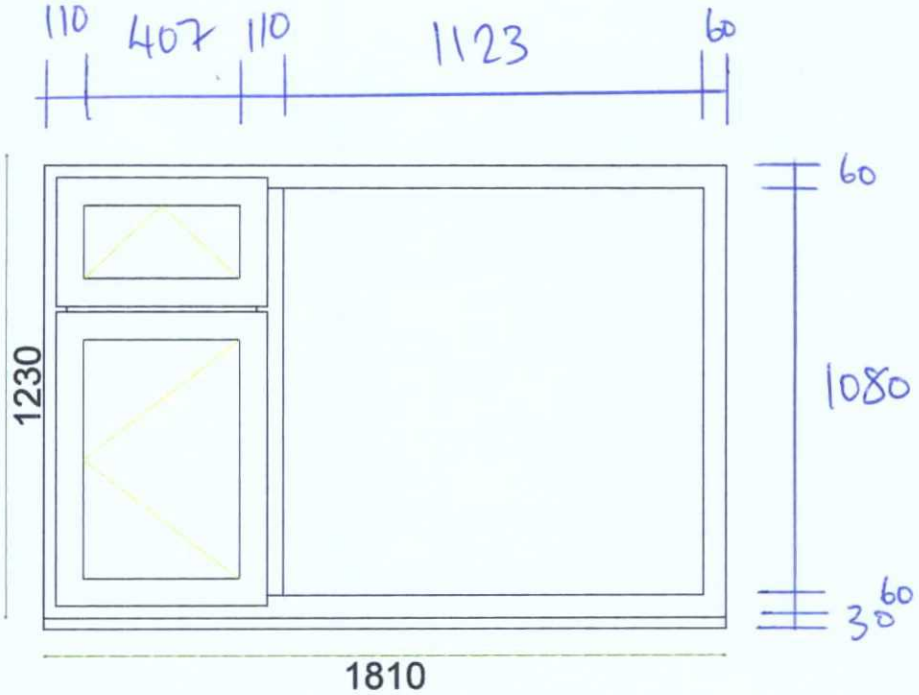

WORTHING BOROUGH COUNCIL
- 7 JAN 2008
CONSENT GRANTED
SUBJECT TO CONDITIONS

Scale - 1:20

Cash Sale

QUOTE NO: 012110
REF: Mrs Moon-Williams

Fair Trade Windows Ltd
11 Peter Road
Lancing Business Park
Lancing, West Sussex, BN15 8TH
TEL: 01903 765508
FAX: 01903 765073

Proposed front Bld

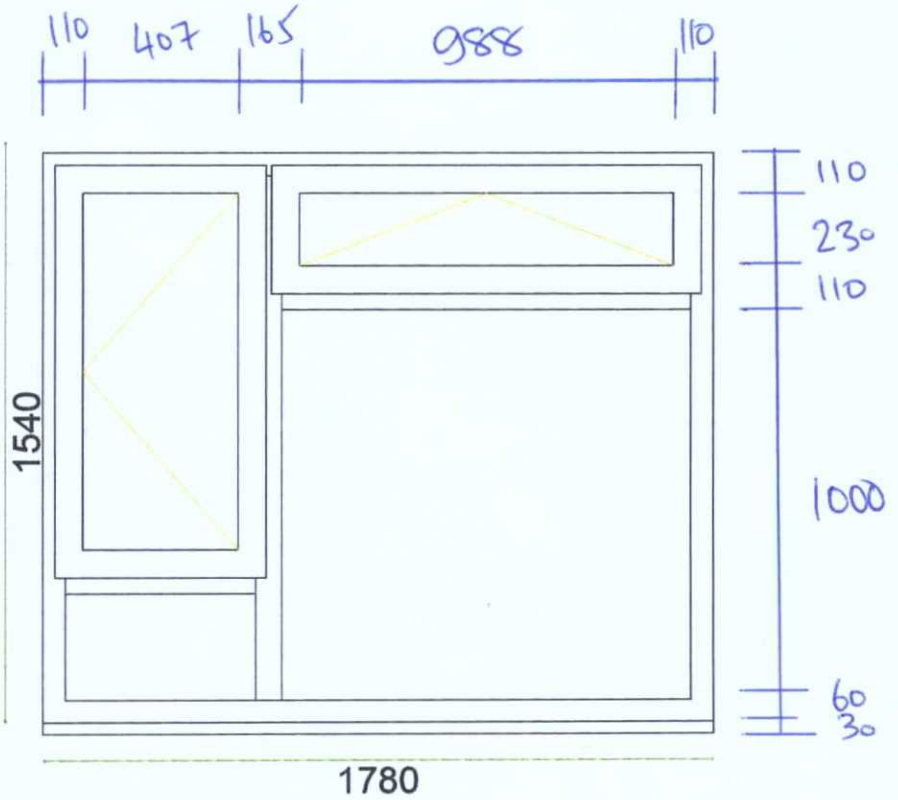

WORTHING BOROUGH COUNCIL
- 7 JAN 2008
CONSENT GRANTED
SUBJECT TO CONDITIONS

Scale - 1:20

Cash Sale

QUOTE NO: 012110
REF: Mrs Moon-Williams

Fair Trade Windows Ltd
11 Peter Road
Lancing Business Park
Lancing, West Sussex, BN15 8TH
TEL: 01903 765508
FAX: 01903 765073

Existing Front Bed

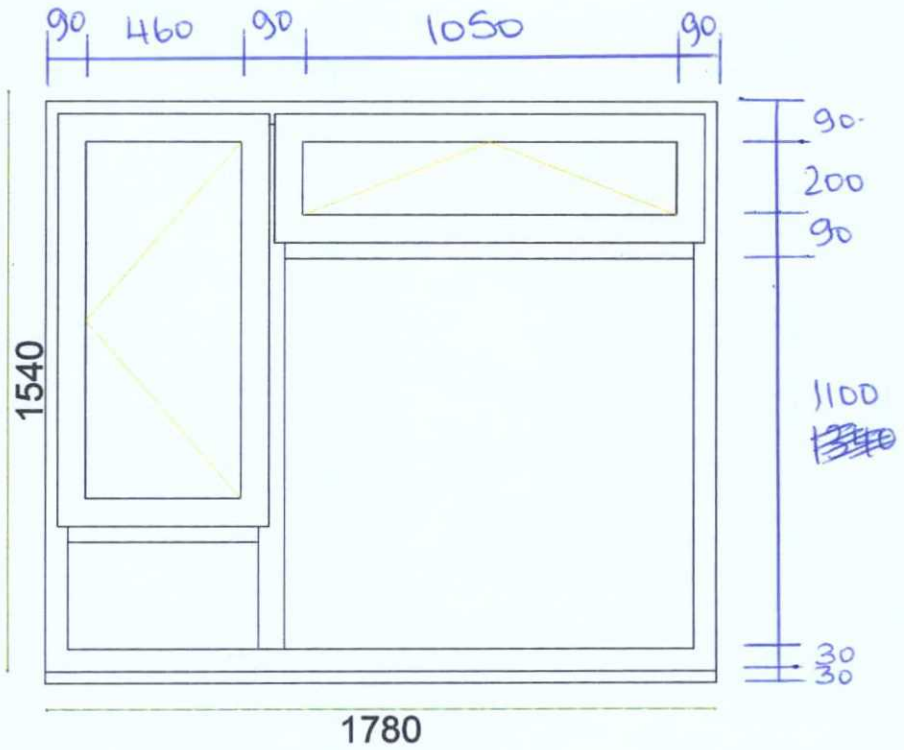

Scale - 1:20

Cash Sale

QUOTE NO: 012110
REF: Mrs Moon-Williams

Fair Trade Windows Ltd
11 Peter Road
Lancing Business Park
Lancing, West Sussex, BN15 8TH
TEL: 01903 765508
FAX: 01903 765073

Existing Front Door

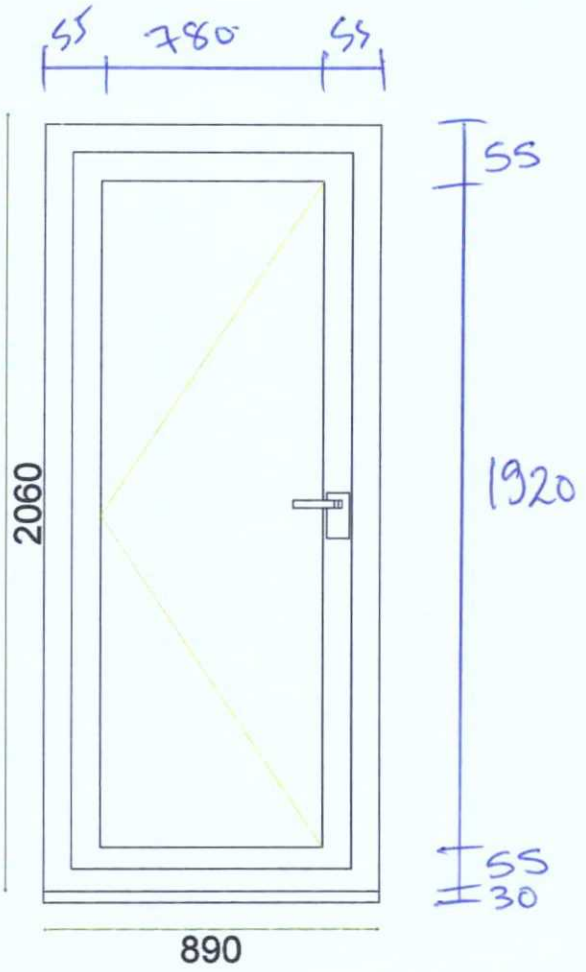

Scale - 1:20

Cash Sale

QUOTE NO: 012110
REF: Mrs Moon-Williams

Fair Trade Windows Ltd
11 Peter Road
Lancing Business Park
Lancing, West Sussex, BN15 8TH
TEL: 01903 765508
FAX: 01903 765073