Proposed Front Door

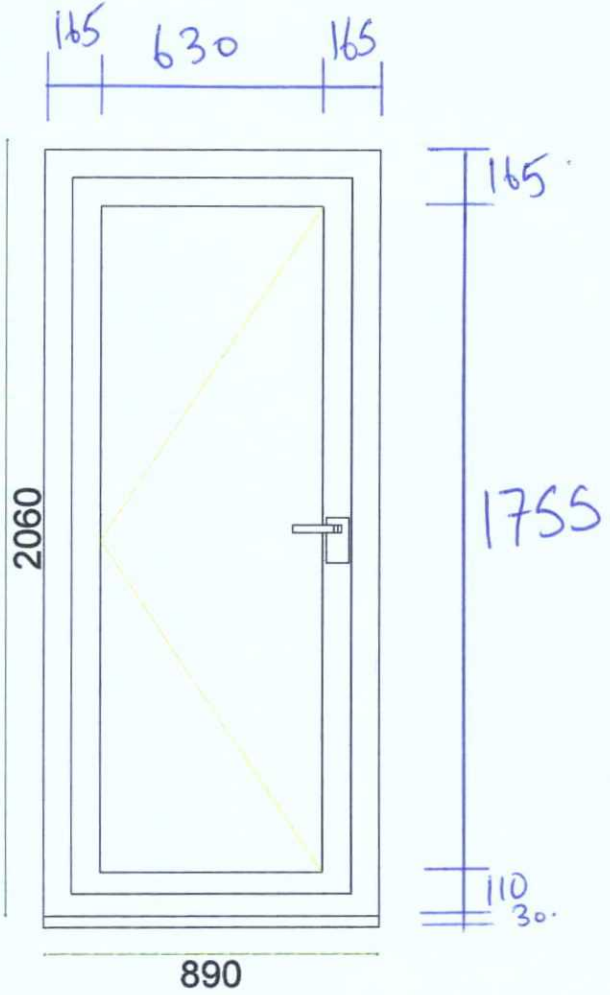


WORTHING BOROUGH COUNCIL
- 7 JAN 2008
CONSENT GRANTED
SUBJECT TO CONDITIONS

Scale - 1:20

Cash Sale

QUOTE NO: 012110
REF: Mrs Moon-Williams

Fair Trade Windows Ltd
11 Peter Road
Lancing Business Park
Lancing, West Sussex, BN15 8TH
TEL: 01903 765508
FAX: 01903 765073

Existing - Kitchen

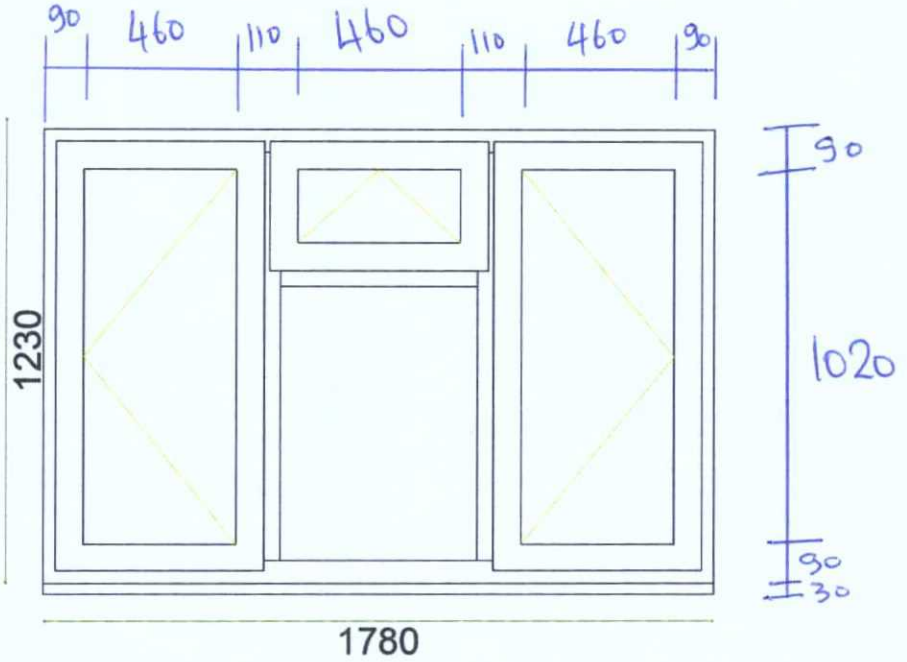


Scale - 1:20

Cash Sale

QUOTE NO: 012110
REF: Mrs Moon-Williams

Fair Trade Windows Ltd
11 Peter Road
Lancing Business Park
Lancing, West Sussex, BN15 8TH
TEL: 01903 765508
FAX: 01903 765073

Reposed Kitchen

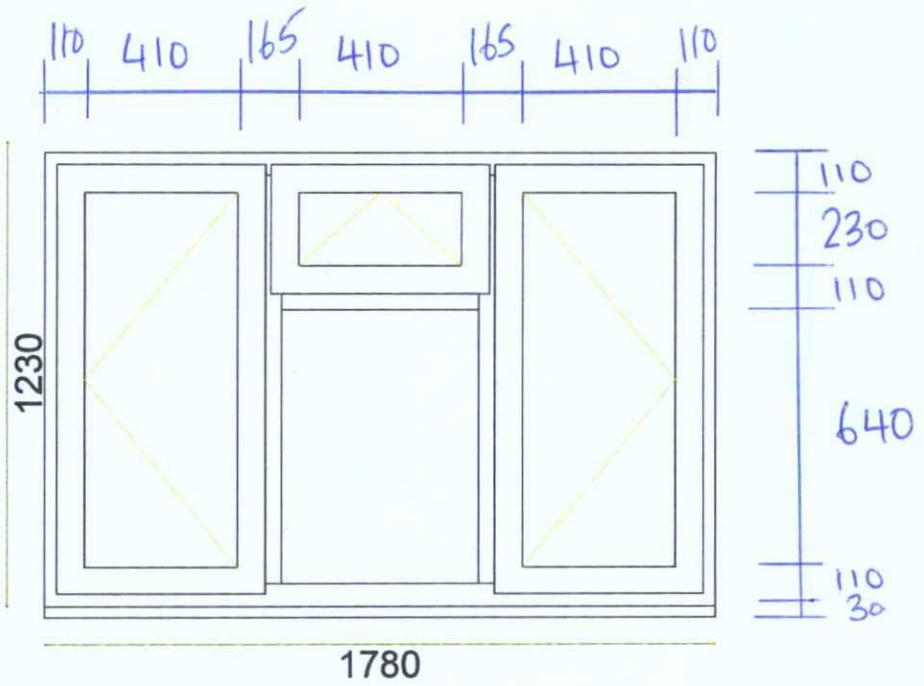


WORTHING BOROUGH COUNCIL
- 7 JAN 2008
CONSENT GRANTED
SUBJECT TO CONDITIONS

Scale - 1:20

Cash Sale

QUOTE NO: 012110
REF: Mrs Moon-Williams

Fair Trade Windows Ltd
11 Peter Road
Lancing Business Park
Lancing, West Sussex, BN15 8TH
TEL: 01903 765508
FAX: 01903 765073

EXISTING. Bay front.

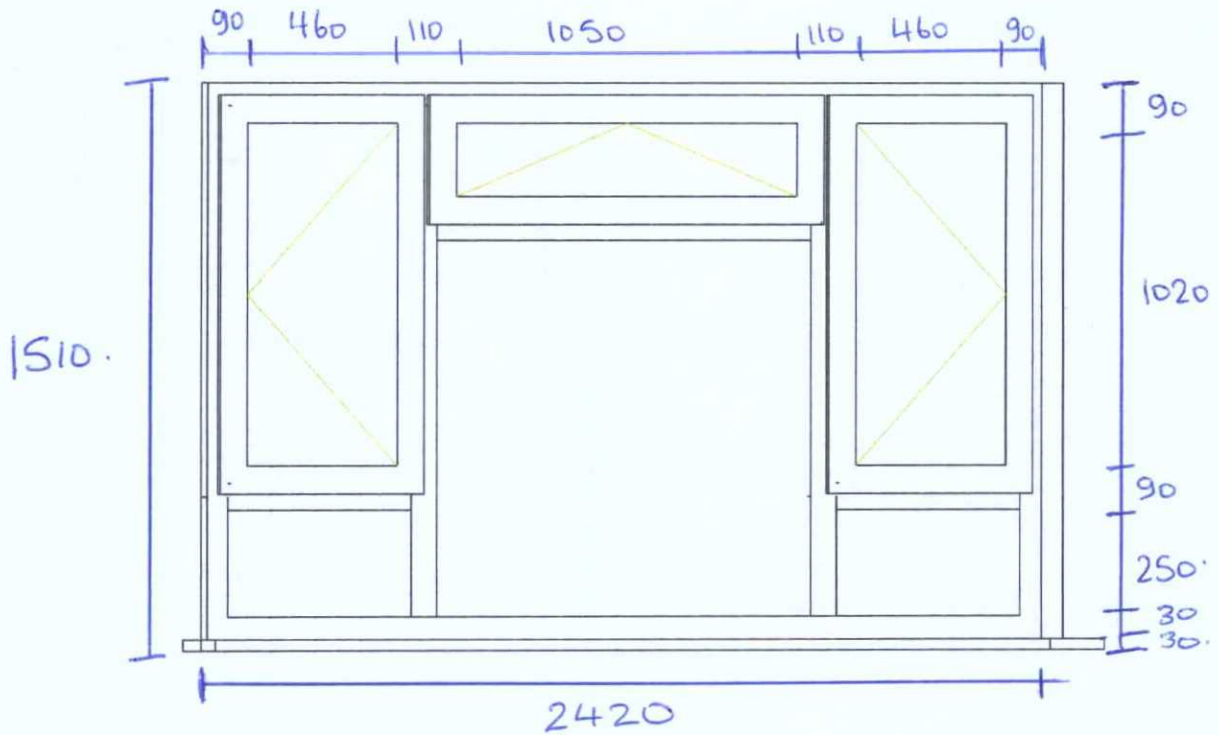


Scale - 1:20

Cash Sale

QUOTE NO: 012110
REF: Mrs Moon-Williams

Fair Trade Windows Ltd
11 Peter Road
Lancing Business Park
Lancing, West Sussex, BN15 8TH
TEL: 01903 765508
FAX: 01903 765073

Proposed Bay front

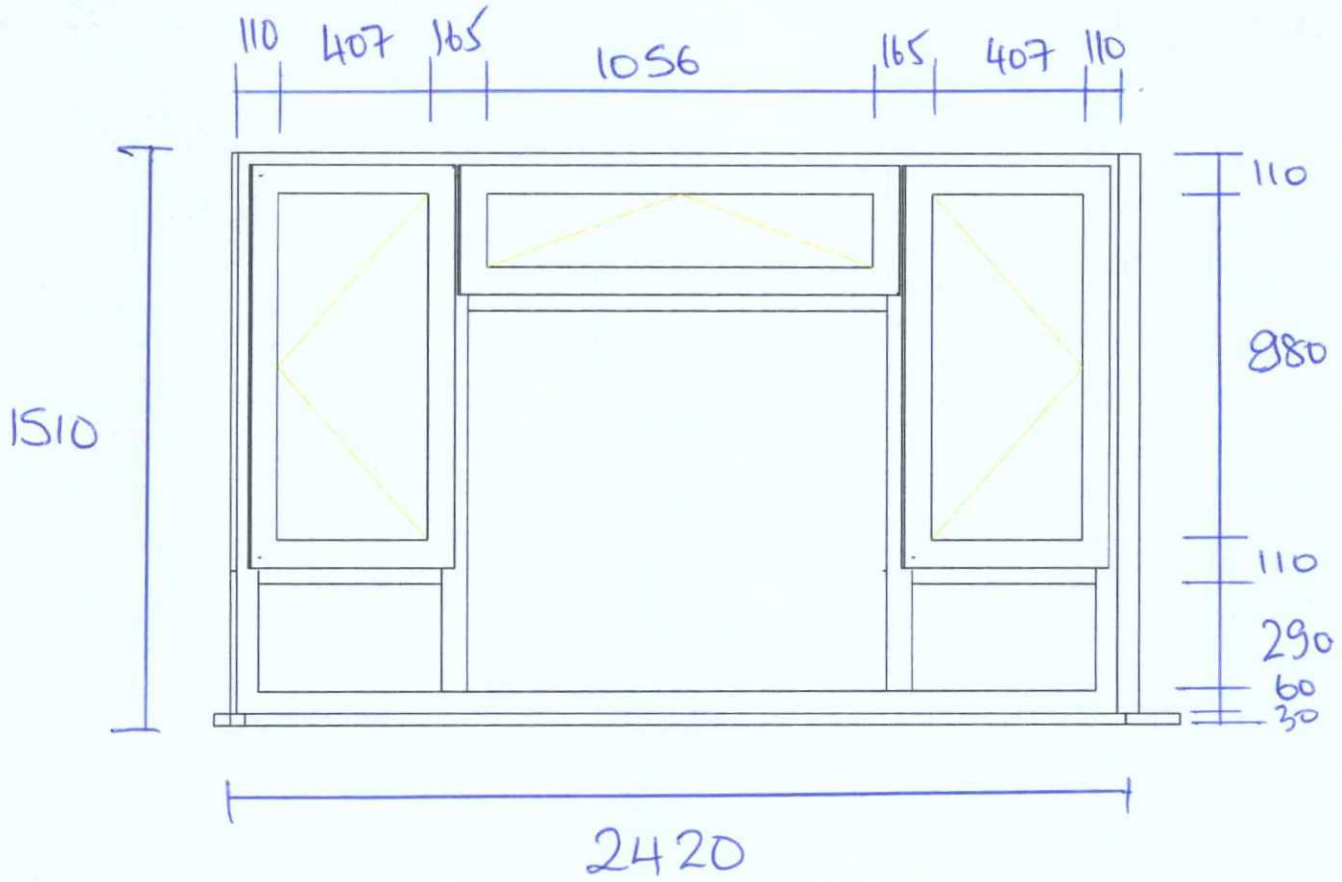


WORTHING BOROUGH COUNCIL
- 7 JAN 2008
CONSENT GRANTED
SUBJECT TO CONDITIONS

Scale - 1:20

Cash Sale

QUOTE NO: 012110
REF: Mrs Moon-Williams

Fair Trade Windows Ltd
11 Peter Road
Lancing Business Park
Lancing, West Sussex, BN15 8TH
TEL: 01903 765508
FAX: 01903 765073

EXISTING BAY SIDE

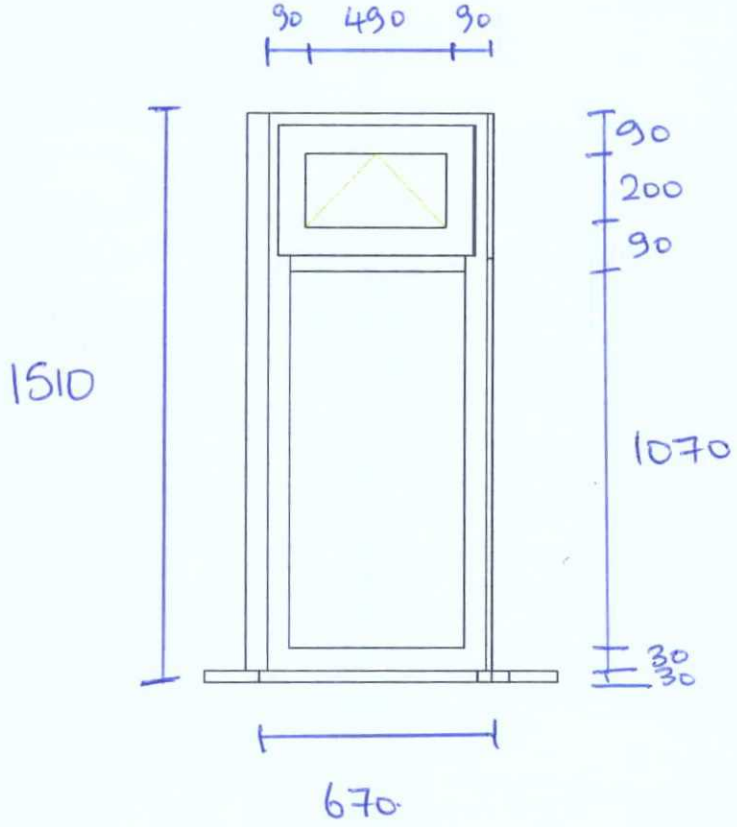


Scale - 1:20

Cash Sale

QUOTE NO: 012110
REF: Mrs Moon-Williams

Fair Trade Windows Ltd
11 Peter Road
Lancing Business Park
Lancing, West Sussex, BN15 8TH
TEL: 01903 765508
FAX: 01903 765073

Proposed Bay Side

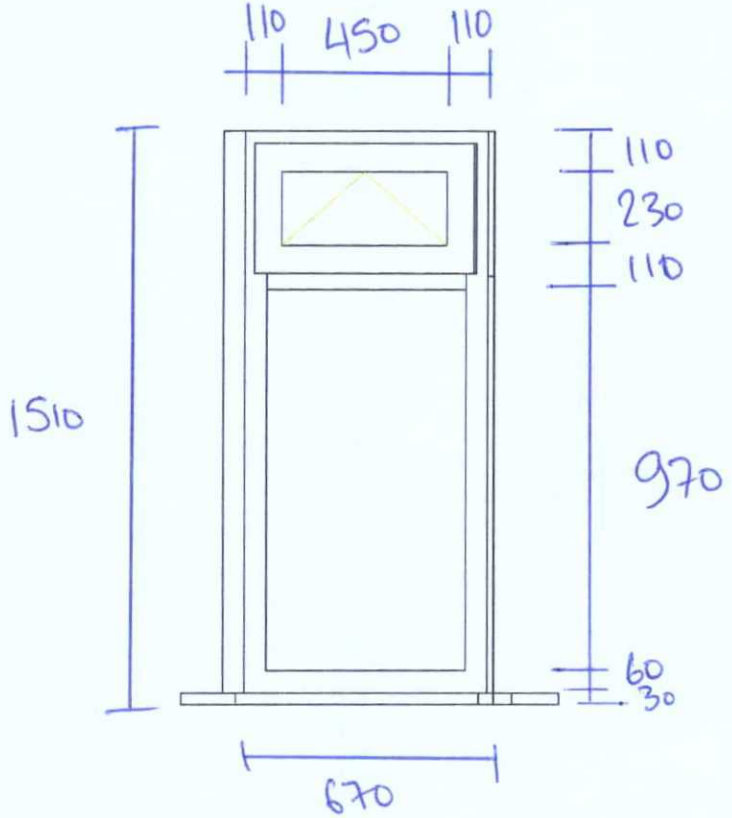


WORTHING BOROUGH COUNCIL
- 7 JAN 2008
CONSENT GRANTED
~~SUBJECT TO CONDITIONS~~

Scale - 1:20

Cash Sale

QUOTE NO: 012110
REF: Mrs Moon-Williams

Fair Trade Windows Ltd
11 Peter Road
Lancing Business Park
Lancing, West Sussex, BN15 8TH
TEL: 01903 765508
FAX: 01903 765073