2.2 General Arrangement

Constructed from high impact PVC-U the mainframe is 70mm deep (front to back) and has a visible sightline of 53mm.

Hinging All vents are hinged to open outwards, as either top hung vents or side hung vents, with all glazing secured by internally fitted beads.

Joints All frame and sash sections are mitred and welded at the joints. On White Knight and Dual products the excess residue from the welding process is removed to leave a feature groove finish. On fully foiled products the residue both internally and externally is removed by knifing.

Reinforcement Galvanised steel reinforcement is only fitted to White Knight product when required in accordance with Anglian's specification standards. Dark foiled products are always fully reinforced.

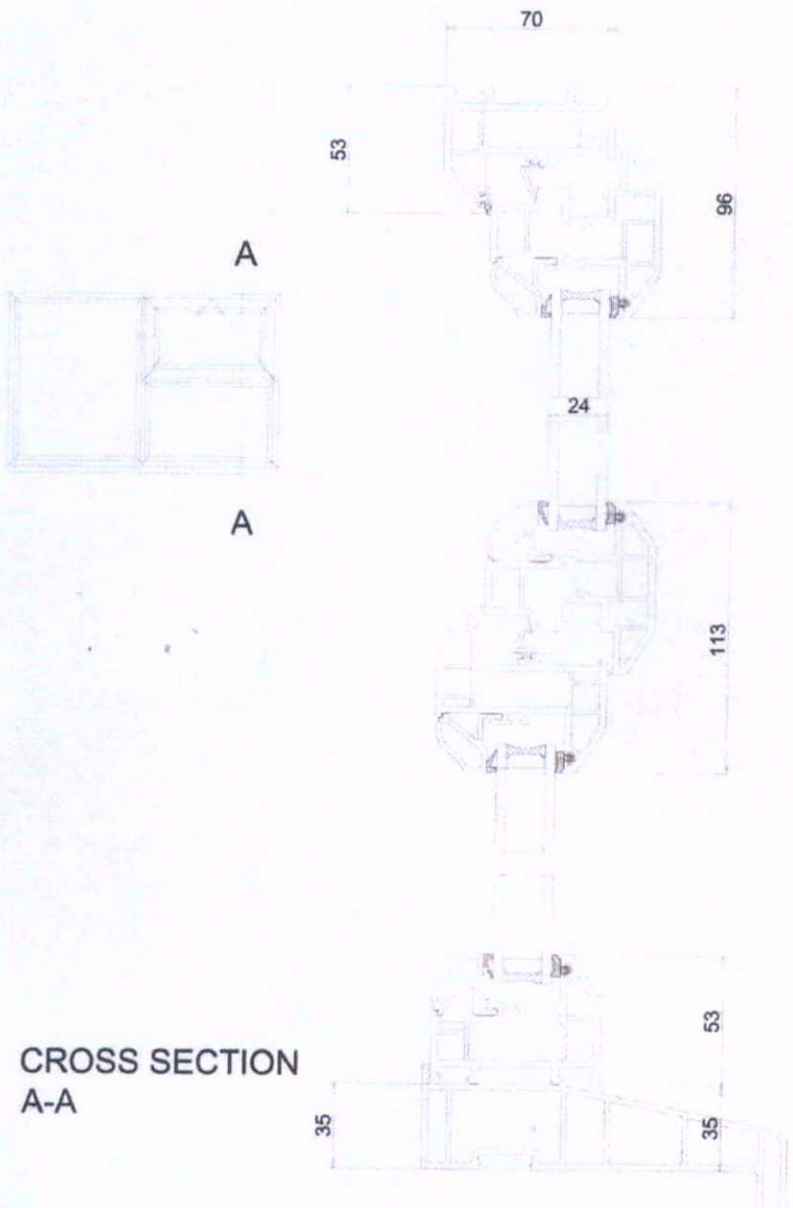

CROSS SECTION
A-A

CASEMENT WINDOW

Typical Splay and Square Bay Post Construction

TYPICAL BAY ARRANGEMENT

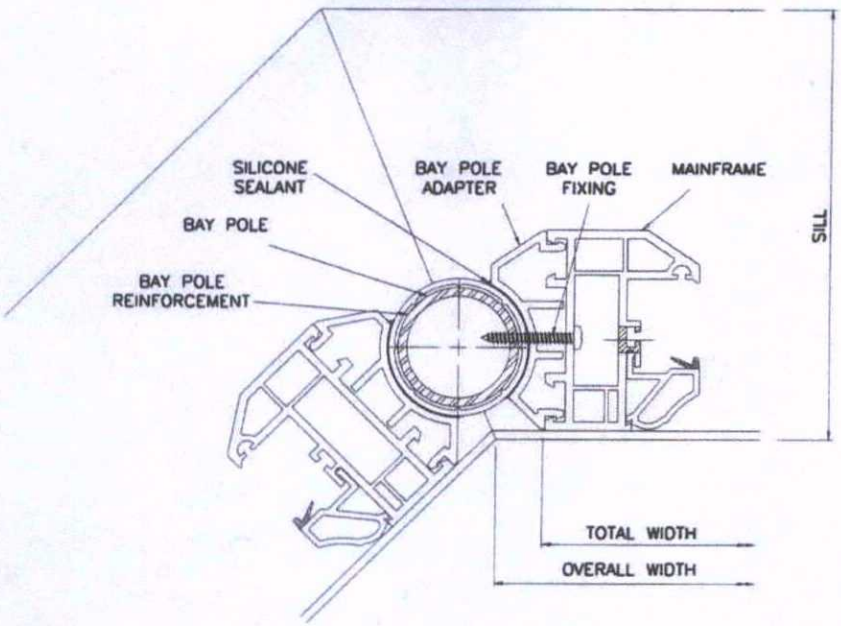

CORNER POST ARRANGEMENT

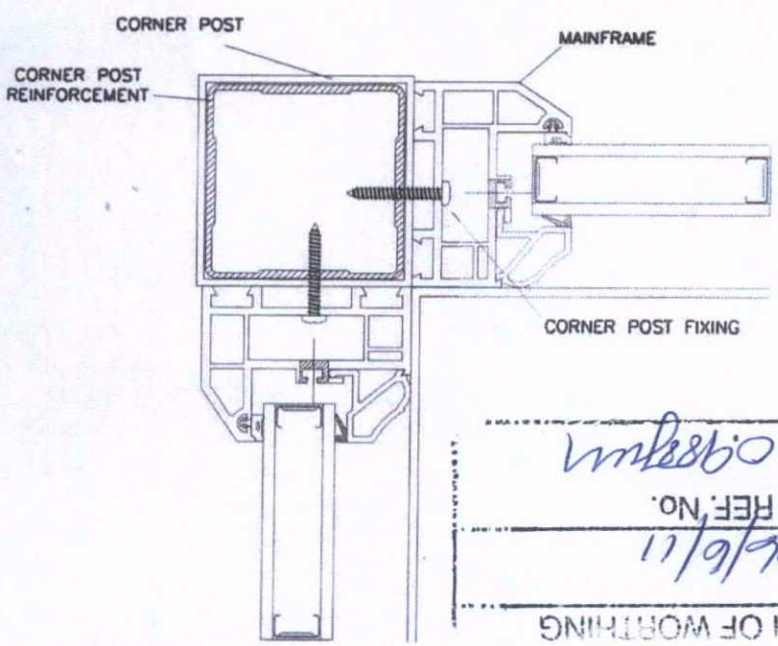

BOROUGH OF WORTHING
DEPOSITED 26/6/11
TP. REF. No.
WB/10 10.9837m

T.P. OFFICE COPY

T.P. OFFICE COPY

CROSS SECTION B-B

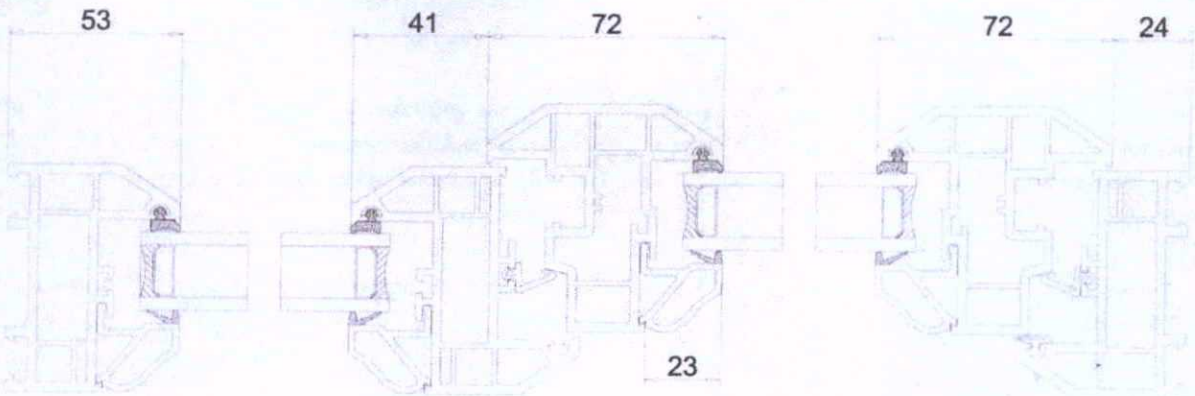

CROSS SECTION C-C

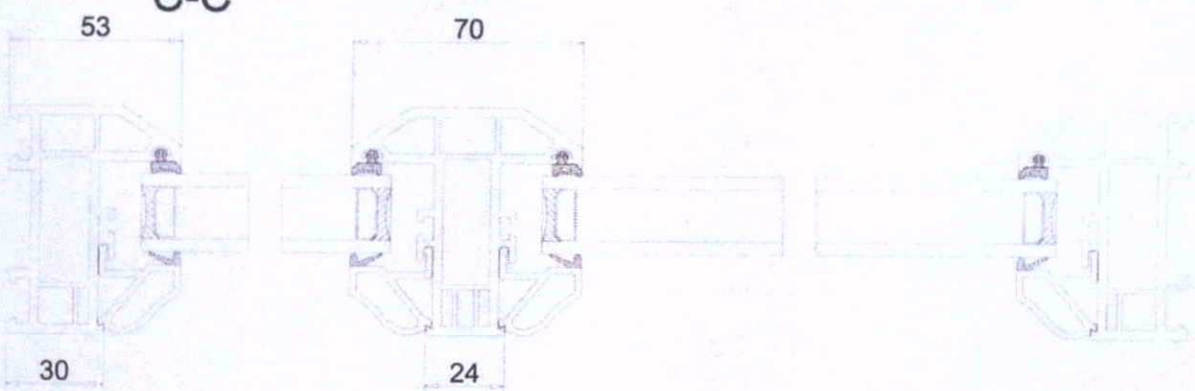

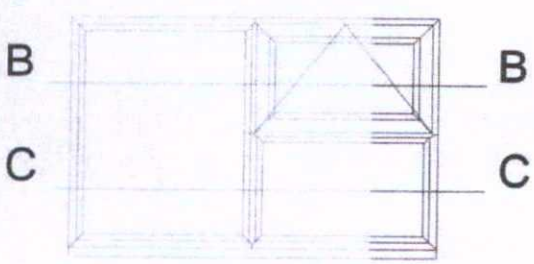

CASEMENT WINDOW