Building Regulation Notes

Any parts of structure covered over or inaccessible have not been inspected and no responsibility is accepted for these areas including underground. All electrics, heating, plumbing and decorations to be altered/extended all to client's choice. All lengths of proposed beams to be measured on site prior to ordering, to verify structural engineer's dimensions. All foundations and lintels taking additional loads are to be exposed and checked for adequacy and suitability for ground conditions prior to commencement of work. The building fabric should be constructed so that there are no reasonably avoidable thermal bridges in the insulation layers caused by gaps within the various elements, at the joints between elements and at the edges of elements such as those around window and door opening. Reasonable provision should also be made to reduce unwanted air leakage through the new envelope parts.

First Floor

New areas of first floor to be 22mm T & G flooring, moisture resistant grade chipboard of 15kg/m² on new floor joists at 400mm centres insulated with 100mm Rockwool quilt for sound insulation purposes.

Steel beams and supports

Any new to be clad to afford 1/2hours fire resistance encased in 12.5mm Fireline board upon a timber cradle or alternatively coated with intumescent paint (Nullifire or similar)

Internal stud partitions

To be constructed of minimum 100 x 50mm studding at 400mm centres with sw base and head plates and cross noggings at maximum 1200mm centres. Insulated with 100mm quilt for sound insulation, faced both sides with 12.5mm Soundbloc plasterboard finished with set.

Flat Roof

To be throughout to be a warm roof construction. Timber roof structures to be fixed in accordance with BS Codes of Practice no CP3 and CP112 Flat roof covered with 3 layers built up felt to BS747 finished with 12.5mm chippings bedded in bitumen. All felt work and detailing to be in accordance with CP144. 130mm of Celotex laminated roof board on type 1B felt vapour control layer on 18mm WBP plywood decking on sw firrings laid to give a fall of at least 1 in 40, all on C16 grade sw joists (as shown on plans.) Rain water to discharge onto existing pitched roof. 100mm x 50mm wall plate strapped down to walls using 1000 x 30 x 5mm mild steel straps at 1.2m centres. Rainwater to 100mm half round PVC gutter laid to falls to the 65mm down pipes as shown discharging on existing roof.

Dormers

To be constructed of 100 x 50mm studding at 400mm centres with 100 x 100mm posts at corners and window jambs. Studding to be lined externally with plain tile hanging of colour to match main roof on 38 x 19mm battens and breather paper (Sisalkraft) on 12.5mm sheathing ply and insulated with 80mm Celotex (GA3000Z) insulation with 25mm unvented air space and then overdrawn with 12mm Celotex tuff-R TB3000, joints taped and 12.5mm gpyroc wallboard and set. Rafters to be doubled up under dormer cheeks. Provide code 4 lead soakers and flashings as necessary. External wall to bathroom dormer facing the boundary to be lined externally with 12.5mm Superlux and internally with 12.5mm plasterboard to achieve ½ hour fire resistance from both sides with 1000 gauge polythene vapour barrier between 80mm Celotex insulation & plasterboard finish, as before.

Smoke Detectors

At least one number main operated self-contained smoke alarm to BS 5446: Part 1 to be installed in the circulation space of each storey. All smoke alarms within each dwelling to be inter-connected, be permanently wired to a separate fused circuit at the distribution boards in accordance with IEE Regulations. They may operate at a low voltage via a mains transformer. Smoke alarms must be installed within 7m of the living room and kitchen door, within 3m of all bedroom doors and within 15m of each other in corridors or landings. If ceiling mounted, smoke alarms should not be installed within 300mm of a light fitting. If wall mounted, smoke alarm should not be over radiator and should be fixed elsewhere within 150 and 300mm of the ceiling.

Stairs

Standard timber staircase with rise, going, width and layout as shown on plan. Pitch 42 degrees maximum. Openings in vertical balustrades not to exceed 99mm. Minimum handrail height for stairs and landing to be 900mm. Handrail to be continuous top to bottom of flight, with no finger traps. Minimum headroom over pitch of staircase to be 2000mm, measured vertically above the pitch line. Minimum going at newel posts to be 50mm. ALL DIMENSIONS TO BE CHECKED ON SITE PRIOR TO MANUFACTURE

Electrics

All electrical work required to meet the requirements of Part P (Electrical Safety) must be designed, installed, inspected and tested by a person competent to do so. Prior to completion the Council should be satisfied that Part P has been complied with. This may require an appropriate BS 7671 electrical installation certificate to be issued for the work by a person competent to do so. A minimum of 75% of all new lighting will be high efficiency type

Heating

Any radiators to be installed into new rooms are to be fitted with TVR s.

Ventilation

New windows to provide open able ventilation area of not less than 1/20th of the floor area of the rooms, which they serve, all fitted with a minimum 8000mm² trickle ventilator. All new and replacement windows to be double glazed PVC C rated with 16mm air gap and a "soft" low-E coating. All glazing in those critical locations to be of toughened or laminated safety glass in accordance with clause 5.3, BS6206. Any new bathroom to be provided with an extract fan capable of extracting not less than 15 litres per second operated intermittently and ducted to external air. The U values of the windows will be 1.6 W/m²K and the doors 1.8 W/m²K

Foul Water Drainage

All complying with BS EN 752. All fittings to be provided with trapped waste pipes as follows: Sink, shower & baths – 40mm diameter Wash hand basin 32mm diameter WC – 100mm diameter Common waste pipes to be 50mm diameter. All traps to be 75mm deep seal & all waste pipes are to be fitted with rodding access on tight bends. Common wastes or runs in excess of 1.7m long are to be fitted with anti-syphonic traps, all to discharge into existing soil and vent pipe to be 100mm UPVC and terminate 900mm above any opening windows within 3.0m including a PVC cage. Any new drains to be 100mm diameter UPVC pipes laid and surrounded in pea beach to fall 1 in 40, provide concrete cover where invert is less than 450mm. Provide rodding access at the base of any new soil and vent pipe.

Surface Water

Rainwater to 100m half round PVC gutter laid to falls to discharge onto existing roof.

Sanitation Hot Water Safety and Water Efficiency

There will be a supply of wholesome water (mains water supplied and stored in accordance with the requirements of the Water Supply (water fittings) Regulations 1999) to the following locations.....

a) Any place where drinking water is drawn off.

b) Wash hand basins, baths, showers and sinks.

c) Sanitary conveniences –however alternative supplies to sanitary conveniences are acceptable (e.g. harvester rainwater).

Heated (includes softened) wholesome water will be supplied to the following locations.....

Wash hand basins, bidets, baths, showers and sinks (in areas where food is prepared).

Any hot water storage and supply system installed is required to be commissioned in accordance with procedures set out in the domestic heating compliance guide .Commissioning documentation will be required at completion. Hot water storage systems should be designed and installed in accordance with BS 6700, 2006 + A1 2009. Indirectly heated unvented (closed) storage water heater should comply with BS EN 12897.2006.

Building Regulation Revisions November 2012

Provide fascia or low level tile vents equivalent to a continuous opening of not less than 25mm along the length of the eaves. To assist cross ventilation high level tile or ridge ventilators will be installed equivalent to a continuous opening of not less than 5mm along the length of the ridge.

All skeilings to be insulated with 50mm Celotex, securely supported and battened to achieve a minimum airspace of 50mm over the insulation and under draw with a further 70mm of Celotex with 1000 gauge polythene vapour barrier between insulation and plasterboard.

Dwarf stud partition to be of minimum 100 x 50mm studding at 400mm centres with sw base and head and cross nogged. Insulated with 100mm Celotex insulation, 12.0mm Celotex over studwork and polythene vapour barrier plasterboard and set finish.

Beam Details

Rafters R1 to be 100x50mm timbers at 400mm centres.
Beam L1 to be 2no 125x50mm timbers
Beam B2 to be 2no 150x50mm C24 grade timbers bearing onto 100x100mm posts well braced in stud wall
Beam B3 to be 152x89x16UB bearing as for Beam B1
Post P1 to be 2no 100x50mm timbers well braced in stud wall.
Post P2 to be as P1
Beam B8 to be 152x152x23 UC bearing onto 225x100x12mm m.s. plate & bolted to beam with 2no M16 ϕ bolts.
Beam B10 to be 127x76x13 UB bearing onto 225x100x 12mm m.s. plate.
Beam B12 to be 2no 220x50mm C24 grade timbers
Beam B14 to be 152x89x16 UB bolted to beam with 2no M16 ϕ bolts
Beam B15 to be 152x152x23 UC bearing onto 225x100x 12mm m.s. plate
Beam B16 to be 152x152x23 UC with bearing as B15
Beam B17 to be 127x76x13 UB with bearing as B15
Beam B18 to be 178x102x19 UB with bearing as B15

Flat roof Joists (FR1) to be 175x50mm timbers at 400mm c/c.
Beam B1 to be 152x89x16 UB bearing onto 225x100x 12mm m.s. plate & bolted to beam with 2no M16 ϕ bolts.
Beam B4 to be 2no 150x50mm C24 grade timbers bearing as for Beam B2
Beam B5 as for Beam B4
Floor Joists (F1) to be 175x50mm timbers at 400mm centres
Beam B6 to be 178x102x19 UB bolted to beam with 2no M16 ϕ bolts
Beam B7 to be 152x89x16 UB with min 150mm bearing.
Beam B9 to be 2no 170x50mm timbers with a 150x10mm m.s. plate in between, bolted together at 400mm centres with M16 ϕ bolts
Beam B11 to be as Beam B9

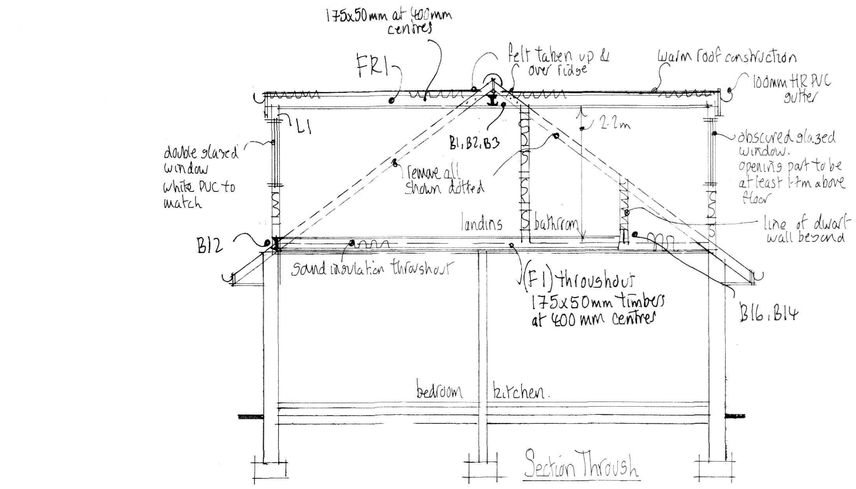

Section Through

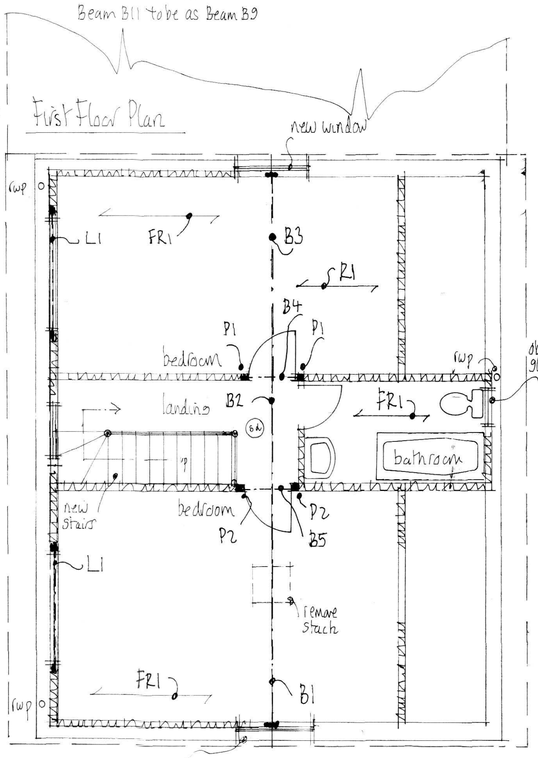

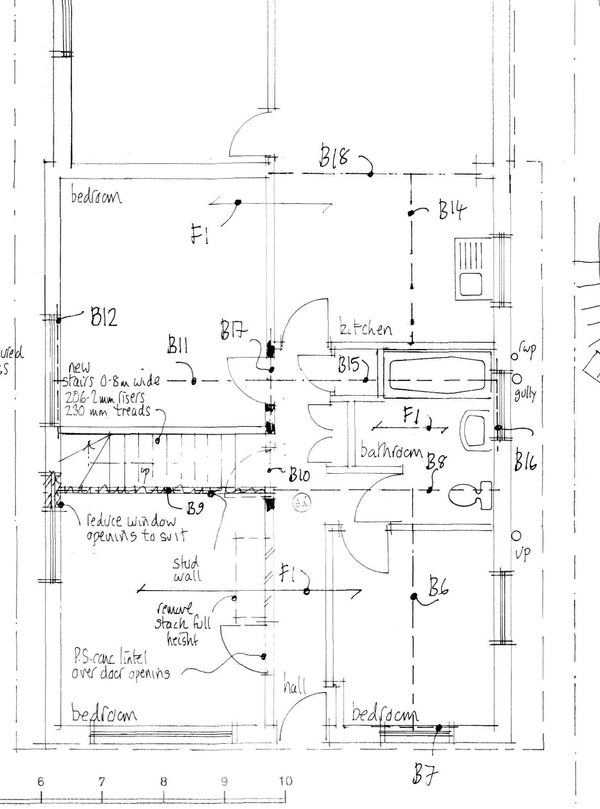

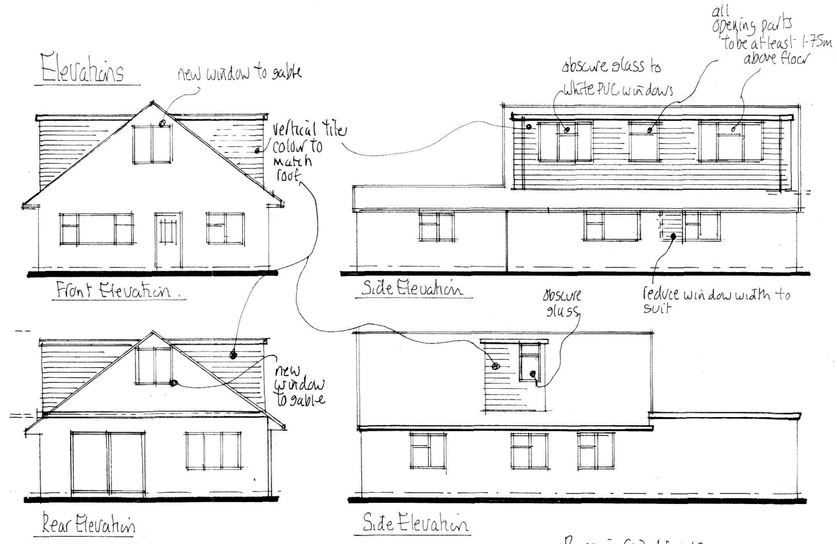

Revision (a) Nov 12

Planning requirement – All windows to side dormers to be obscured glass. Any opening part to be at least 1.75m above floor level.

Cubic capacities

(1) 0.5x3.4x2.5x9.1 = 38.67
(2) 0.5x3.4x2.5x1.9 = 8.075
46.745 m³

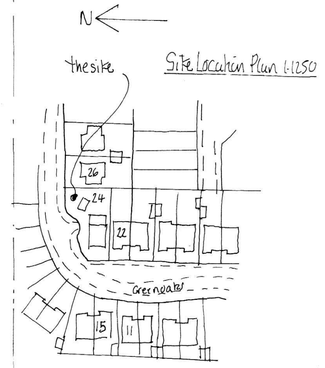

Mel Humphrey
MRICS MBEng
39 Northease Drive
Hove East Sussex BN3 8PQ
Mobile: 07701 055182
RICS Email: mel_humphrey_uk@yahoo.co.uk

Drawing Title: Loft Conversion @ 24 Greenoaks Lancing West Sussex
Scale: 1:50, 1:100
Date: August 12 Drawn by: mjh
A1 sized drawing
Org No. Rev.