6 Windmill Parade
173 Old Shoreham Road
Southwick
West Sussex
BN42 4QB

PLANNING SUBMISSION BROCHURE DETAILS

Solar PV System Specification for Grade II Listed Building in Conservation Area

Reference: AWDM/0016/25/
Dawn Anthony-Unsted
Email: Dawn.Anthony-Unsted@adur-worthing.gov.uk
Date: 23/01/2025

Site Address

Greenstede House, Durrington Hill, Worthing, West Sussex

Background Information

Listed Building Consent for installation of a **5.88kW solar photovoltaic (PV) system**, comprising a total of **14 panels** and associated ancillary equipment.

The submitted plans show the following panel layout:

- **7 panels** installed on the **flat roof addition** located on the south side of the property.
- **1 panel** installed on the **stepped-down southerly pitched roof** behind the flat roof addition (labelled as panel ?07?).
- **6 panels** installed on the **southerly pitched roof of the adjacent detached garage** to the west.

These works are designed to **maximise solar energy generation** while remaining **in keeping with the property and surrounding environment.**

---

1. Schletter Solo Rail System

Manufacturer: Schletter Group
Product: Schletter Solo Rail
Material: Aluminium EN-AW 6063 T66
Certification: Eurocodes structural verification, 25-year warranty
Purpose: Provides a secure and durable mounting rail for pitched roof solar installations. The rail is compatible with all ProLine roof hooks, connectors, and clamps.

---

2. Schletter Universal Standard Roof Hook

Manufacturer: Schletter Group
Product: Schletter Universal Roof Hook
Material: High-grade steel with zinc flake coating
Certification: EN 1991 structural compliance
Purpose: Adjustable roof hook designed for interlocking & rosemary tiles, ensuring secure attachment of mounting rails while accommodating various roof structures.

---

3. HookStop Vibration Protection

Manufacturer: HookStop
Product: HookStop Flexible Tile Support
Material: Recycled R900 rubber
Purpose: Prevents vibration damage to roof tiles by providing a flexible, durable cushion beneath the roof hook.

---

4. Solarwatt 420W Vision Black Solar Panel

Manufacturer: Solarwatt GmbH
Product: Solarwatt Panel Vision AM 4.5 Black
Technology: Glass-glass bifacial monocrystalline TOPCon cells
Power Output: 420W
Efficiency: 90% performance warranty for 30 years
Certifications: IEC 61215, IEC 61730, PID protected

---

5. Van Der Valk L10 Landscape Kit (Flat Roof Mounting)

Manufacturer: Van Der Valk Solar Systems
Product: ValkPro+ L10 Landscape Kit
Material: Aluminium and stainless steel
Purpose: Mounting system for solar panels on flat roofs, with a 10-degree fixed tilt for optimal solar gain. Engineered for high wind resistance with integrated ballast trays.

---

6. Solax Hybrid X1 Inverters (Garage Mounted)

Manufacturer: Solax Power
Product: Solax X1 Hybrid Inverter

Type: Single-phase hybrid inverter
Features:

- IP65 rating for dust and water resistance
- 2000W to 6000W capacity range
- Smart energy management with remote monitoring

---

7. Solax T58 Battery Storage (Garage Mounted)

Manufacturer: Solax Power
Product: T-BAT-SYS-HV-5.8 (T58)
Battery Type: LiFePO4 (Lithium Iron Phosphate)
Capacity: 5.8 kWh per unit (4 units installed = 23.2 kWh total)
Efficiency: 90% Depth of Discharge (DOD), >6000 cycle lifespan
Certifications: IEC62619, UN38.3, UL1973

---

8. Hi-Tuff 3 Core 10mm Cable by Doncaster Cables

Manufacturer: Doncaster Cables
Product: Hi-Tuff 3 Core 10mm²
Material: Plain annealed copper with XLPE insulation
Purpose: Designed for outdoor installation with UV and mechanical protection, ensuring long-lasting performance.

---

9. Schletter Rapid16 Black Anodized Panel Clamps

Manufacturer: Schletter Group
Product: Rapid16 Module Clamps (Black Anodized)
Material: Aluminium (Black Anodized)
Purpose: Securely clamps the solar panels to the mounting system, ensuring stability and compatibility with module frame heights of 30–50mm. Features:

- **Available in black anodized finish to match black-framed solar panels.**
- **Includes integrated grounding pin for electrical safety.**
- **Compatible with Schletter mounting profiles with 8mm KlickNut connection.**
- **25-year warranty.**

Conclusion

This solar PV system has been designed to integrate seamlessly into a **Grade II listed building within a conservation area**, ensuring minimal visual impact while providing a sustainable energy solution. The components selected meet the highest standards for **aesthetics, durability, and efficiency**, complying with all **structural and electrical regulations**.

Supporting datasheets for all components are attached for reference.

Prepared by: Simon Youngman
Company: DW Renewable Energy Ltd

SCHLETTER
The Solar Mounting Group

RAPID16

PRODUCT SHEET

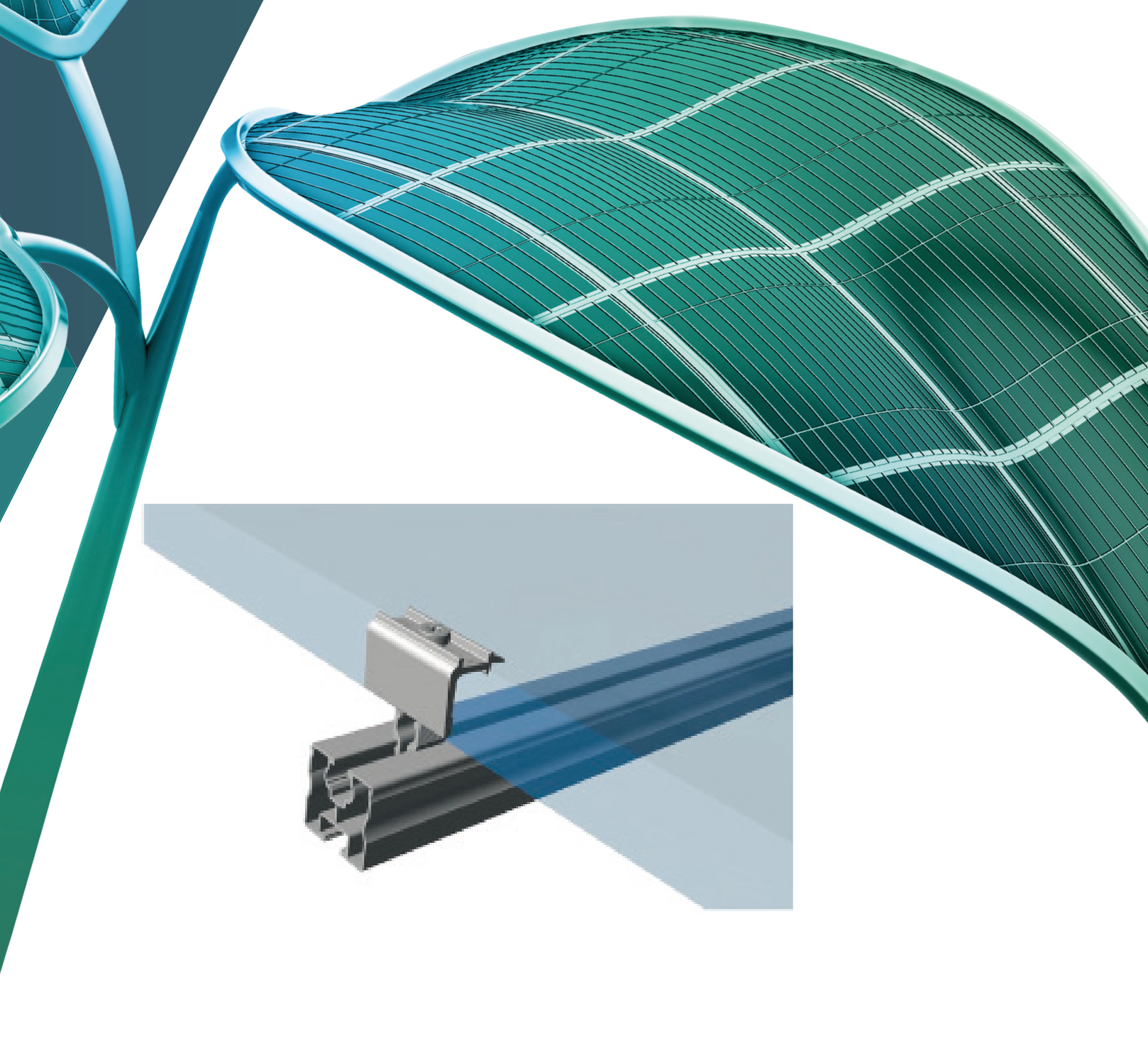

SCHLETTER

RAPID16

THE NEW FAMILY OF CLAMPS

Schletter's new Rapid16 family of modular clamps offers many advantages, such as better warehousing thanks to minimal versions, and a grounding pin in every module clamp. Rapid16 is right for any Schletter module-bearing profile with an 8 mm Klicknut and is designed for module frame heights of 30–50 mm.

- **Minimal versions for all applications**
- **Integrated grounding pin**
- **Optimal warehousing and fast installation**
- **General building approval Z14.4-631**
- **25-year warranty***

The clamping range is divided into two sizes. The lower module clamps can hold modules with a frame height of 30–40 mm.
The higher ones are suitable for frame heights of 40–50 mm. With all middle clamps and the high end clamps, all claws can be rotated and are therefore suitable for vertical or horizontal (linear) module clamping. The exception is the end clamps for low module frames. For geometric reasons, rotation is not possible on them.
Therefore there is also a low end clamp in an "H" version.

All clamps are also available in black anodized versions to best coordinate them with black module frames.

INSTALLATION TYPE

VERTICAL:

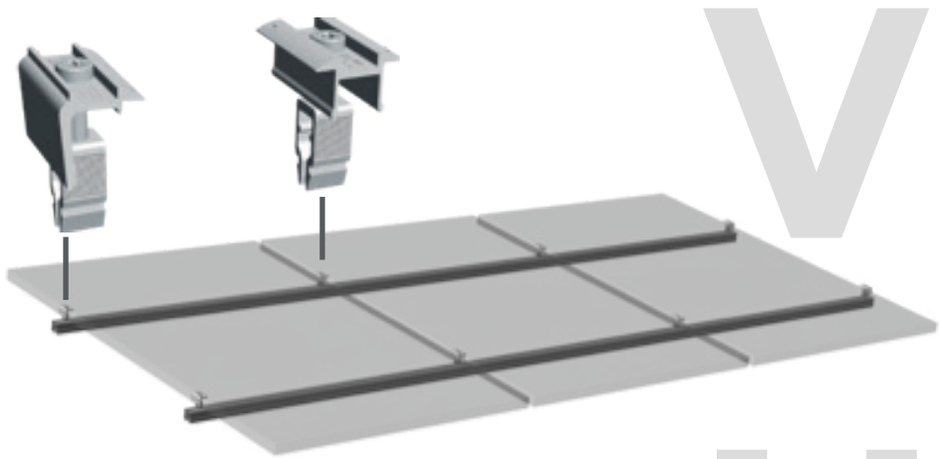

HORIZONTAL:

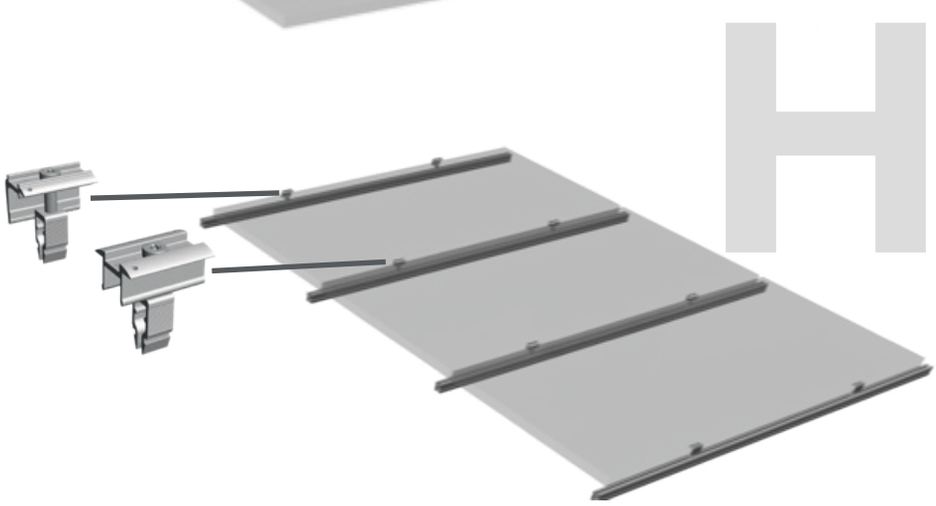

*in accordance with our warranty conditions

SCHLETTER SOLAR GMBH I WE RESERVE THE RIGHT TO MAKE CHANGES.

ITEM

BLANK ALUMINUM	BLACK ANODIZED	Item designation	Installation type
131121-002	**131121-902**	Center clamp Rapid16 40-50	
131101-002	**131101-902**	End clamp Rapid16 40-50	V + H
131121-001	**131121-901**	Center clamp Rapid16 30-40	V + H
131101-001	**131101-901**	End clamp Rapid16 30-40	V + H
131101-003	**131101-903**	End clamp Rapid16 H 30-40	V H

For more information, see www.schletter-group.com

SCHLETTER SOLAR GMBH
Alustraße 1
83527 Kirchdorf
GERMANY

www.schletter-group.com



SCHLETTER

COMPONENT OVERVIEW

2023/2



EN

NEW SERIES LABELLING

We would like to make it easier for you to select the products by using the icons. At a glance, you can see which item fits which system. Of course, our expert technicians will continue to be at your disposal should you have any questions in this regard.



COMPATIBLE WITH OUR STANDARD SERIES



COMPATIBLE WITH OUR PROLINE SERIES

GENERAL INFORMATION

MATERIALS:
Roof hooks and their main components:
High-grade steel with zinc flake coating, stainless steel 1.4301 or aluminium

Screws:
Stainless steel A2 or better

Sheet metal parts:
Stainless steel 1.4301 or aluminium

Module clamps:
Aluminium

Rubber seal:
EPDM gasket (UV-resistant)

Deviating materials are described with the individual items.

PLANNING AID:
Configuration and structural dimensioning with the Schletter Configurator.

STRUCTURAL ANALYSIS:
Static calculation according to the current country-specific standards (in Germany EN 1991, EC1). Structural analysis supplement for the dimensioning of the number of required fastening points, based on the structural analysis. Please make sure you observe the structural analysis information in each case! The verification of the adhesive force of the roof to the substructure is not included in the general structural analysis appendices!

Tolerances:
Production-specific tolerances are to be considered with all dimension specifications.

GLOBAL DISTRIBUTION NETWORK:
On customer request, all companies in the Schletter Group can obtain goods from other branches.

TABLE OF CONTENTS

COMPONENT OVERVIEW

PRESENTATION 4

Brochures and software 5
Sample case 6

ROOF HOOKS 7

Standard roof hooks 8
Rapid^{2+} Pro roof hooks 9
Pro HSL roof hooks 10
ProLine roof hooks 11
Alu-Tile 12
Special design 13
Accessories 16

SPECIAL FASTENERS 17

Special fasteners for roofs with steel substructure 18
Special fasteners for roofs with wooden substructure 20
Accessories 21
Sheet metal seam clamps 22
Pro sheet metal seam clamps 24
Trapezoidal sheet connection 26
Trapezoidal and bitumen roof connection 27

MODULE CLAMPS 28

Module clamps for framed modules 29
Clamps for laminate modules 31
Laminate clamp accessories 32

PROFILES 33

Module support and mounting profiles 34
Pro module support and mounting profiles 36
Profile accessories 38

SUPPORTS 40

Flat roof system supports 41
Flat roof system and facade supports 42
Green roof supports 43
Beam kit accessories 44
Support accessories 45
Supports system 46

LOAD-OPTIMIZED FLAT ROOF SYSTEMS 47

FixGrid 48
FlatGrid 51
FixGrid Pro 52

PVMAX ENERGY KITS 55

PvMax 56

SCREWS AND SMALL PARTS 58

Screws and small parts 59

PRESENTATION

- BROCHURES AND SOFTWARE
- SAMPLE CASE



BROCHURES AND SOFTWARE

PRESENTATION

The latest brochures, product sheets, mounting instructions and further technical information as well as software can always be found in the download area of www.schletter-group.com.

Upon request, we will also gladly send you our brochures in digital format.

WWW.SCHLETTER-GROUP.COM

SAMPLE CASE

PRESENTATION



UPON REQUEST!

195000-397 Sample case of roof and standard systems
Contains samples of major products of the Schletter mounting systems

Similar illustrations

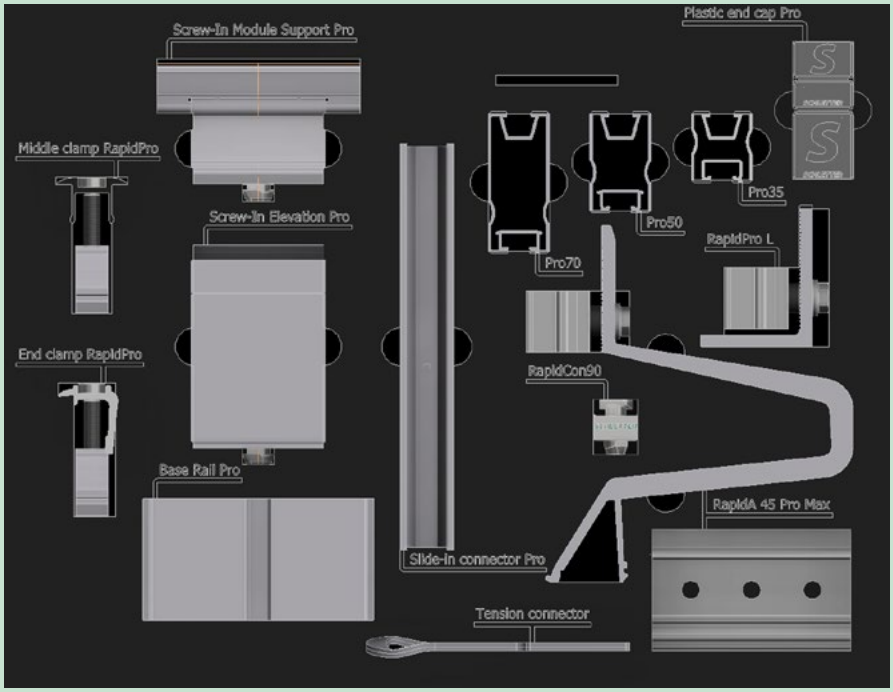

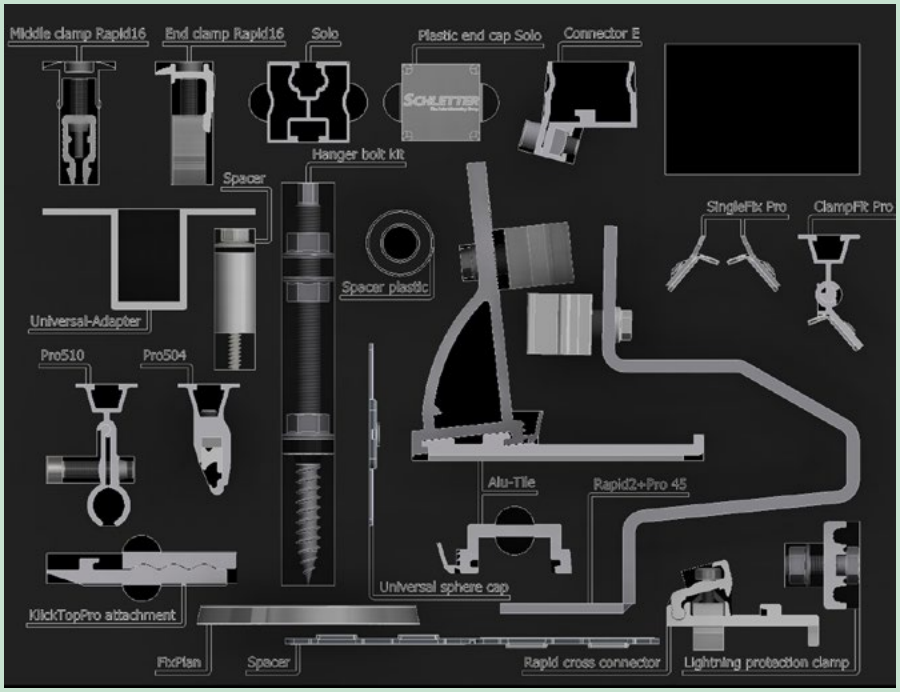

ROOF HOOKS

- STANDARD ROOF HOOKS
- RAPID^{2+} PRO ROOF HOOKS
- PRO HSL ROOF HOOKS
- PROLINE ROOF HOOKS
- ALU-TILE
- ROOF HOOKS, SPECIAL DESIGN
- ROOF HOOK ACCESSORIES

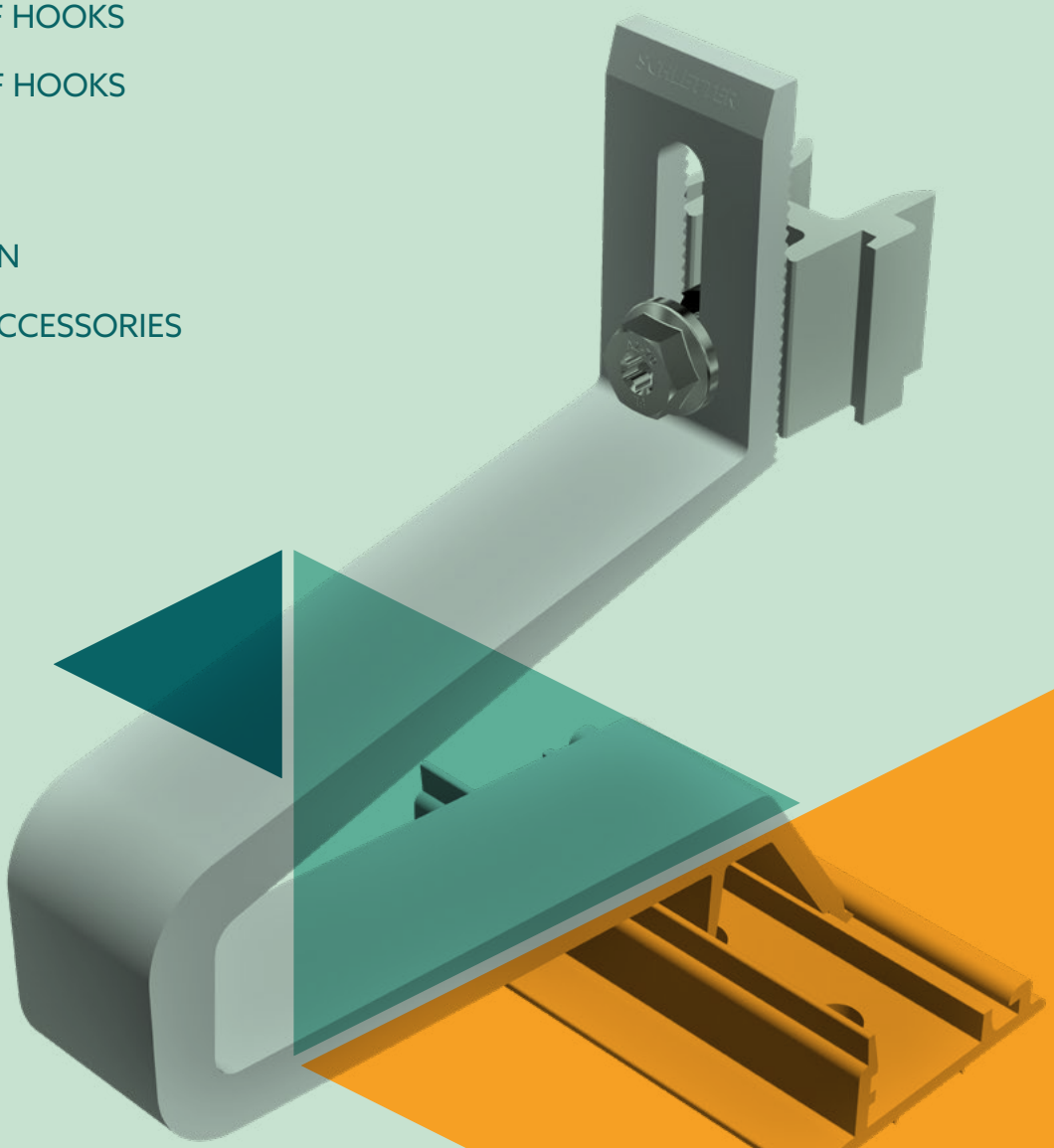

STANDARD ROOF HOOKS

ROOF HOOKS

— All roof hooks made of stainless steel
— Adjustable hooks completely pre-assembled

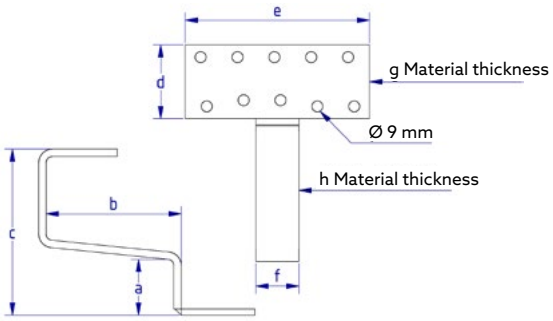

ROOF HOOKS ECO S

— VA quality
— Welded
— Symmetric bar arrangement

100004-000 Eco S 135 roof hooks (normal height 135 mm)									
	a	b	c	d	e	f	g	h	
mm	45	110	135	60	150	35	5	6	PU: 20



100007-000 Eco S 165 roof hooks (normal height 165 mm)									
	a	b	c	d	e	f	g	h	
mm	45	110	165	60	150	35	5	6	PU: 20



UNIVERSAL ROOF HOOKS

— VA quality
— Variable bar arrangement
— Adjustable at the front and rear
— Centre bar can be used in three positions

100001-000 Universal roof hooks (Frankfurt pantile or interlocking tiles)									
	a	b	c	d	e	f	g	h	
mm	42-52	115	102-135	74	150	30	5	6	PU: 20



***NOTE**: Please order wood screws, square head screws (M10 x 25 mm) and flange nuts separately!*

WE WILL BE HAPPY TO ADVISE YOU.

For competent and comprehensive advice in planning your system, and for questions about logistics and order processing, our employees are gladly available to you.

SCHLETTER SOLAR GMBH
Alustrße 1, 83527 Kirchdorf
Germany

WWW.SCHLETTER-GROUP.COM

WE SUPPORT SOLAR.

We reserve the right to make changes, including technical modifications.
© Schletter Solar GmbH, KUE41_V1_EN_2023

SCHLETTER

MODULE-BEARING RAIL PRO

PRODUCT SHEET

+ Compatible with all ProLine roof hooks, connectors and clamps

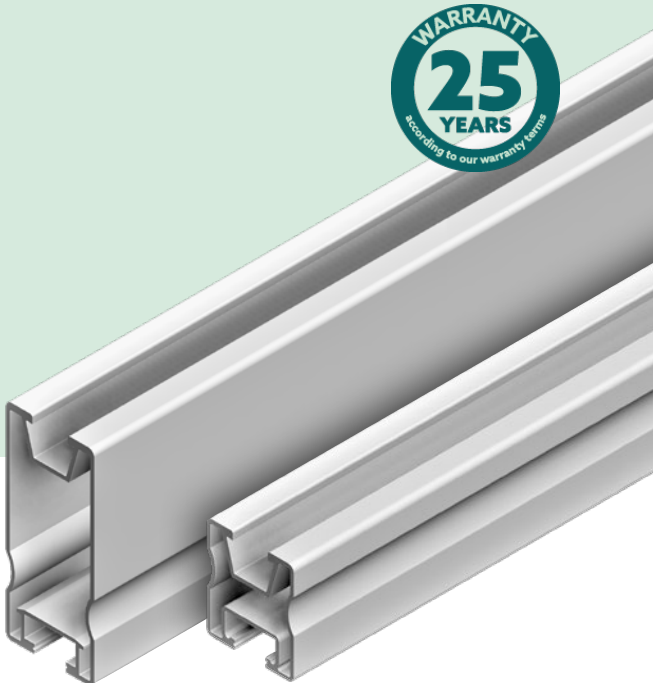

THE RIGHT COMPONENT FOR ANY APPLICATION

The rails are available in a variety of thicknesses and lengths to meet the needs of whichever system.
The Schletter Configurator determines the loads and shows applicable rails which can be selected during configuration.

MECHANICAL CONNECTION

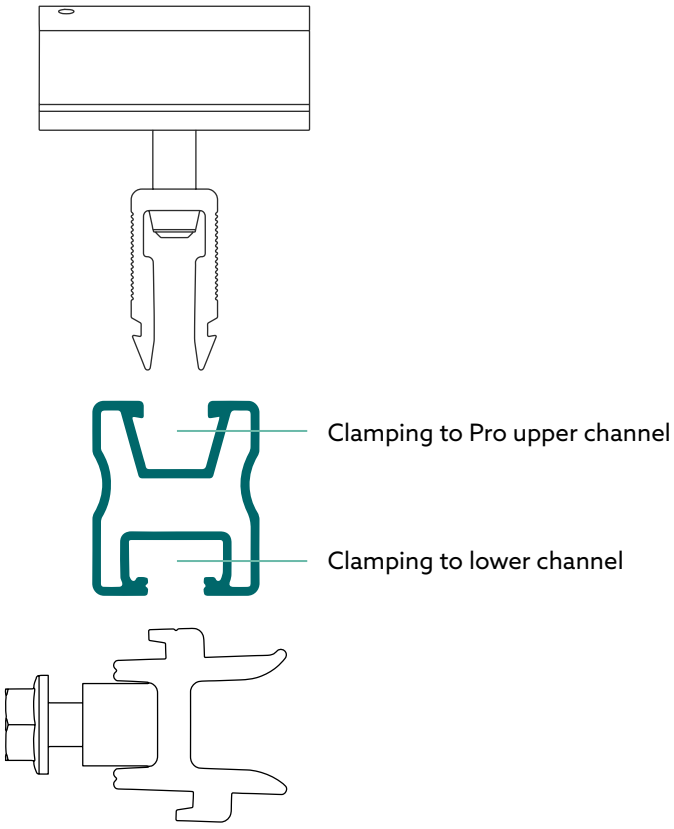

TECHNICAL DETAILS

Material	Aluminum EN-AW 6063 T66 (or similar)
Planning aid	Configuration and design report via the Schletter Configurator *(schletter-group.com > Services > Configurator)*
Structural design	Structural calculation based on current recognized rules of technology. Structural verification of the mounting system is based on the relevant Eurocodes in conjunction with general building inspectorate approvals. The load assumptions comply with DIN EN 1991-1 and the regulations of the national annex. Verification of roofing and building is not included. Notes in the verification must be observed.
Warranty	25 years according to our Guarantee Terms and Conditions
Supplementary documents	Product Catalog - Module-bearing rails

ITEM OVERVIEW

PRO 35

AL BLANK

120020-00450	450 mm	PU: 50
120020-03550	3550 mm	
120020-04400	4400 mm	
120020-04750	4750 mm	
120020-05900	5900 mm	

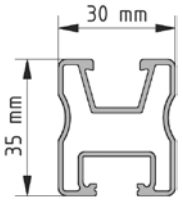



ITEM OVERVIEW

PRO 50

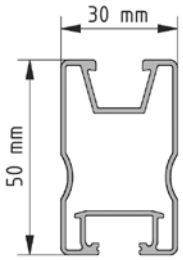

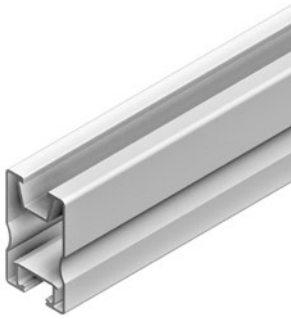

AL BLANK

120021-00260	260 mm	PU: 50
120021-02450	2450 mm	
120021-03550	3550 mm	
120021-04400	4400 mm	
120021-04750	4750 mm	
120021-05900	5900 mm	

BLACK ANODIZED

120021-94750	4750 mm

PRO 70

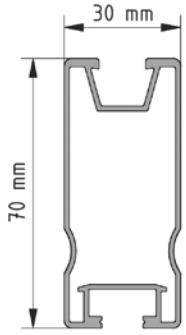

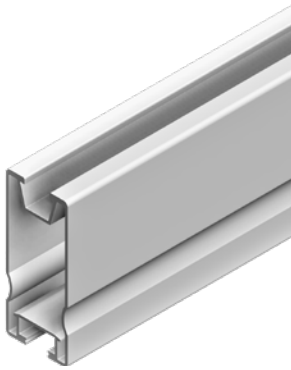

AL BLANK

120022-05900	5900 mm

PRO 100

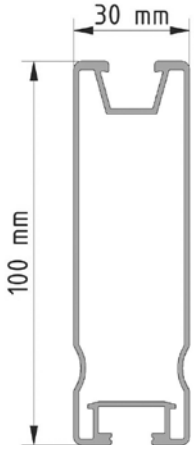

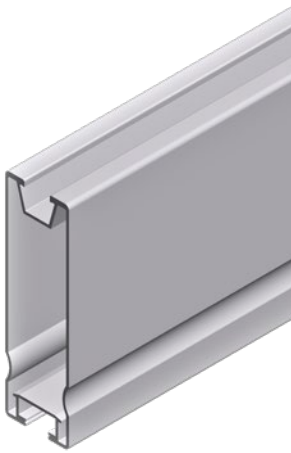

AL BLANK

120023-00450	450 mm	PU: 35
120023-05900	5900 mm	

ITEM OVERVIEW

SOLOPRO

All the advantages of the ProLine Series with the dimensions of the tried and tested Solo Rail. Clamp to the Pro upper channel and M10 lower channel.

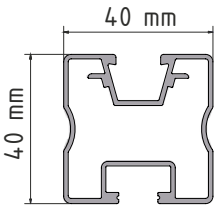



AL BLANK	
120039-04400	4400 mm
120039-04750	4750 mm
120039-05900	5900 mm
120039-06200	6200 mm

SUPPLEMENTARY PARTS (ordered separately)

129200-000	Pro Internal Connector	PU: 40
129063-020	Rapid Cross Connector 90 Pro	PU: 150
129063-002	RapidConnect90	PU: 100
129200-010	Pro Plastic End Cap (grey)	PU: 100
129200-910	Pro Plastic End Cap (black)	PU: 100
129011-000	Solo Plastic End Cap (grey)	PU: 100
129011-900	Solo Plastic End Cap (black)	PU: 100
135003-022	Grounding and lightning protection clamp Pro A2 M8	PU: 20
131021-xxx	Pro Module Clamps (Al blank or black anodized)	
132xxx-328	Pro Clamps for laminate modules	PU: 100

- PLEASE NOTE:
  Further details on parts can be found in the product catalog.
- The Rapid Cross Connector 90 Pro is not compatible with the SoloPro upper channel.
- Pro end caps are compatible with Pro 35, Pro 50 & Pro 70 only.
- SoloPro requires Solo end caps.

Data Sheet

HookStop
flexible tile



Physical

Material	Recycled	
Grade	R900 Rubber	
Material Thickness	**min:** 10mm	**max:** 20mm
Overall Width	165mm	
Overall Length	248mm	
Overall Height	10mm	
Weight	Approx 540g	

Technical

Density	900 kg/m^3			
Tensile Strength	1.4 n/mm^2 B.S.903/2a			
Elongation at break	80% min B.S.903/2a			
Hardness	60° Shore A			
Durability	Amendment N°2 to B.S.5696 part 3 advises • Wear index should not be greater than 1.0 • Wear ratio should be between 1.0 and 3.0			
	Unaged	**Air Aged**	**Water**	**Aged**
Wear Index (g/1000 revs.)	0.18	0.19	0.25	0.18
Wear Ratio	1.29	1.36	1.14	1.20
Slip Resistance	B.S. 7188 (Recommended Minimum Value Of 40)			
	Dry	**Wet**		
	63-68	52-56		
Flammability	Conforms to B.S.4790 –B2 (din4102) • Time from application of nut to extinction 383-425 seconds. • Greatest radius of affected area 19-20mm • Classification low radious of ignition			
Thermal stability	Thermal expansion from 20° to 50°c is 0.5% Thermal expansion from 50° to 80°c is 1%			
U.V Stability	B.S. 1006 light fast to 7 (lifespan dependent of type of surface wear/application and location)			
Permeability	Rypol is porous, flow rates are determined by the type of base substrate on which tiles are laid. (nominal 50 lts/m2 at 0.2 bar)			
Sound damping	Up to 30 db reduction			
Storage	Store away from sources of punctures and physical damage. Store away from ignition sources and open flame			
Shelf Life	Unlimited			

Patents Pending. Product Produced in the UK

Please note: the above data does not form part of any guarantee on behalf of the manufacturer.

Information given as a guideline based on test results found by reputable test houses.

Prevents Tile Breakages
HOOK STOP
Patent pending

Visit our website and see how it's done in real time action, by scanning the QR code.
You can download QR readers from App Store.

www.hookstop.co.uk

VAN DER VALK
SOLAR SYSTEMS

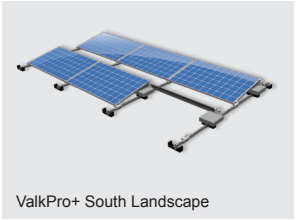
ValkPro+ South Landscape


ValkPro+ East-West


ValkPro+ Max South

Datasheet ValkPro+ | ValkPro+ East-West | ValkPro+ Max

The concept

- Mounting system for PV-panels on flat roofs (commercial and domestic).
- For south and east-west configurations.
- Fixed tilt angle of 10° (landscape or portrait).
- Low ballast, shielded system with wind deflectors (south).

ValkPro+ vs. competitive systems

- Most cost effective solution.
- All metal connections, no plastic. This ensures high strength and reliability and makes the system easy to ground and for equalization of potential.
- Also suitable for roofs higher than 25 mtrs.
- Can be placed with ballast only on flat roofs with a maximum slope up to 5°. On roofs with a bigger slope, the system needs to be fixed to the roof.
- Universal integrated panel clamps (28-50 mm frame height).
- Suitable to be placed on roofs with gravel, “green roofs” or fixed on steel structures above the roof.
- Elevated mounting on roof for guaranteed drainage.

Additional features

- Designed and calculated according to latest building regulations.
- Low ballast and roof load, thanks to the use of wind deflectors and coupled rows.
- Easy and fast installation, thanks to limited number of parts and screw joints.
- Maximum logistical advantage, thanks to limited number of different parts and dimensions.
- Smart solutions to hold cables and cable baskets.
- Easy to disassemble.

Panel formats

- ValkPro+ (south & east-west) is standard applicable for panels with the following dimensions:

Configuration	Panel length min [mm]	Panel length max [mm]*	Panel width min [mm]	Panel width max [mm]	Pitch [mm]
L10° South	1520	2320	977	1350	1500*
L10° East-West	1520	2320	977	1070	2300
			1071	1120	2400
			1121	1170	2500
P10° South	1559	2200	900	1500	2300*
P10° East-West	1560	1680	900	1500	3500
	1681	1730	900	1500	3600
	1731	1830	900	1500	3800
	1831	2035	900	1500	4200
	2036	2135	900	1500	4400
Max South	2096	2500	900	1500	3000*
Max East-West	2096	2172	900	1500	4500
	2173	2268	900	1500	4700
	2269	2369	900	1500	4900
	2370	2471	900	1500	5100

* *Other pitch sizes available on request. Please contact Van der Valk Solar Systems for possibilities.*

CONTACT DETAILS | DEVELOPER AND PRODUCER OF SOLAR MOUNTING SYSTEMS

Van der Valk Solar Systems + *International*
Westernesse 18 - 2635 BG Den Hoorn, The Netherlands
+31 174 25 49 99
sales@valksolarsystems.com

Valk Solar Systems UK + *IE*
+44 1304 89 76 58
sales@valksolarsystems.co.uk

Valk Solar Systems Ibérica
+34 699 326 544
ventas@valksolarsystems.es

Valk Solar Systems Nordics
+46 7 25 27 00 66
sales@valksolarsystems.se

NEW FROM SOLAX

X1-HYBRID G4



X1-Hybrid G4

3.0kW/3.7kW/5.0kW

6.0kW/7.5kW

Features

Support 150% oversized PV power
Excess energy to battery

Fast charging and high power discharge
Max 30A charging & discharge current

Remote units control & upgrading function
External control communication interface

Working under extremely cold condition
Working in full load under extreme cold temp -35°C/-31°F

On & Off grid parallel use
Inverter on&off gird parallel to support higher power loads

Unbalanced output supported
Prevent voltage imbalance when using high-power electrical appliances

info@solaxpower.com
service@solaxpower.com

For More Informations Contact Us

www.solaxpower.com
AU: +61 1300 476529
DE: +49 6142 4091664

Global: +86 571-56260008
UK: +44 2476 586998
NL:+31 (0) 852 737932

X1-HYBRID G4 (SINGLE PHASE)

	X1-Hybrid-3.0-D X1-Hybrid-3.0-M	X1-Hybrid-3.7-D X1-Hybrid-3.7-M	X1-Hybrid-5.0-D X1-Hybrid-5.0-M	X1-Hybrid-6.0-D X1-Hybrid-6.0-M	X1-Hybrid-7.5-D X1-Hybrid-7.5-M
INPUT (DC)					
Max. PV array power [Wp]	4500	5500	7500	9000	10000
Max. DC voltage [V]			600		
Nominal DC operating voltage [V]			360		
Max. input current (input A/input B) [A]			14/14		
Max. short circuit current (input A/input B) [A]			16/16		
MPPT voltage range[V]			70-550		
Start operating voltage[V]			90		
No. of MPP trackers/Strings per MPP tracker			2/1		
INPUT AC					
Max. apparent AC power[VA]	6300	7360	9200	9200	9200
Max. AC current[A]	27.4	32	40	40	40
Nominal grid voltage(AC voltage range)[V]			220/230/240(180-270)		
Nominal grid Frequency/range[Hz]			50/60		
OUTPUT AC					
Nominal AC power [VA]	3000	3680	5000	6000	7500
Max. apparent AC power [VA]	3300	3680	5500(4600for DE 4999for AU)	6600	7500
Nominal grid voltage(AC voltage range) [V]			220/230/240(180-270)		
Nominal grid frequency/range [Hz]			50/60		
Max. AC current [A]	14.4	16	23.9(20 for DE/21.7 for AU)	28.6	32.6
Displacement power factor			0.8 leading...0.8 lagging		
THDi, rated power [%]			<2		
OUTPUT DC (BATTERY)					
Battery type			Li-ion		
Battery voltage range [V]			80-480		
Max.continuous charge/discharge current [A]			30		
Communication interfaces			CAN/RS485		
Reverse connect protection			Yes		
OFF-GRID OUTPUT (WITH BATTERY)					
MAX. continuous apparent power [VA]	3000	3680	5000	6000	7500
Rated voltage[V],Frequency [Hz]			230, 50/60		
MAX.continuous current [A]	13	16	21.7	26.1	32.6
Peak apparent power (rated)[%], Duration[s]	120% rated, 1h	120% rated, 1h	120% rated, 1h	120% rated, 10mins	100% rated
Switching time [ms]			internal switch <10, external switch <100		
THDv, linear Load [%]			<2		
EFFICIENCY					
MPPT efficiency [%]			99.9		
Euro efficiency [%]			97.0		
Max. efficiency [%]			97.6		
Battery charge/discharge efficiency [%]			97.0/97.0		
POWER CONSUMPTION					
Standby consumption [W]			<3		
STANDARD					
Safety			IEC62109-1 / IEC62109-2		
EMC			EN 61000-6-1:2007/EN 61000-6-2:2005/EN 61000-6-3/EN 61000-6-4/EN61000-3-2/EN61000-3-3/EN61000-3-11/EN61000-3-12		
Certification			VDE 0126-1-1 A1:2012 / VDE4105:2018 /G99 /G98 / AS4777 / EN50549/ CEI 0-21 /RD661/RD1699/UNE206007-1/VDE0216/VFR2019		
ENVIRONMENT LIMIT					
Degree of protection(according to IEC60529)			IP65		
Operating temperature range [°C]			-35..... +60°C (derating at +45°C)		
Max. operation altitude [m]			<3000		
Humidity [%]			0~100 (no condensing)		
Storage temperature [°C]			-40..... +70°C		
Typical noise emission [dB]	<30	<30	<30	<30	<45
DIMENSION AND WEIGHT					
Dimensions(WxHxD) [mm]			482*417*181		
Weight[kg]	22	22	22	22	23
Cooling concept	Natural cooling	Natural cooling	Natural cooling	Natural cooling	Forced airflow
Topology			Non-isolated		
Communication interfaces			CT/Meter/External control RS485/Pocket Series(optional)/DRM/USB Upgrade		
LCD display			Yes		
Standard warranty [years]			10		

TRIPLE POWER

- Safest $LiFePO_4$ battery
- 90% DOD
- Cycle life>6000 times
- IP65 protection level
- Floor or wall mounting
- Less self consumption
- Quick installation
- No toxic heavy metals or caustic materials



T-BAT H 5.8
(Master)



T-BAT H 5.8 V2
(Master)



HV11550
HV11550 V2
(Slave)

TRIPLE POWER

Global: +86 571-56260011

Email: info@triple-power.com

T-BAT SYS-HV Configuration List

TRIPLE POWER

	T-BAT H 5.8 T-BAT H 5.8 V2	T-BAT H 11.5 T-BAT H 11.5 V2	T-BAT H 17.3 T-BAT H 17.3 V2	T-BAT H 23 T-BAT H 23 V2
NOMINAL CHARACTER				
Nominal Voltage [V]	115.2	230.4	345.6	460.8
Operating Voltage [V]	100-131	200-262	300-393	400-524
Battery Type	Li-ion (LFP)	Li-ion (LFP)	Li-ion (LFP)	Li-ion (LFP)
Total Capacity [kWh]	5.8	11.5	17.3	23.0
Usable Capacity[1] [kWh]	5.1	10.4	15.5	20.7
Faradic Charge Efficiency [%]	99	99	99	99
Battery Roundtrip Efficiency [%]	95	95	95	95
Standard Power [kW]	2.8	5.7	8.6	11.5
Max Power [kW]	4.0	8.0	12.0	16.1
Recommend Charge/Discharge Current [A]	25	25	25	25
Max Charge/Discharge Current [A]	35	35	35	35
Short Circuit Current[A]	760	760	760	760
Cycle Life	>6000 Cycles	>6000 Cycles	>6000 Cycles	>6000 Cycles
Warranty [Year]	10	10	10	10
ENVIRONMENT REQUIREMENT				
Available Operating Temperature Range [°C]	0 to 55			
Full-load Operating Temperature Range [°C]	5 to 48			
Relative Humidity [%]	4 to 100 (condensing)			
Altitude [m]	Below 2000			
Protection	IP65			
COMMUNICATION				
System to Inverter	CAN2.0			
Battery to Battery/BMS	RS485			
Data Collection Port /FW UPDATE	CAN2.0			
Master Control Working Mode Indicator	1 LED			
Master Control Capacity Indicator	4LED (25%, 50%, 75%, 100%)			
Battery Module LED	2 LED			
Reset	Button			
Switch ON/OFF	Buttonx1 + breakerx1			
STANDARD				
Safety	CE, RCM, IEC62619, UL1973, ROHS, REACH			
UN Number	UN3480			
Hazardous Materials Classification	Class 9			
Transport Testing Requirement	UN38.3			
GENERAL				
Dimensions(LxWxH) [mm]	474x193x708	474x193x708+474x193x647	474x193x708+(474x193x647)x2	474x193x708+(474x193x647)x3
Weight [kg]	72.2	72.2+68.5	72.2+68.5x2	72.2+68.5x3

[1] Test conditions:90% DOD, 0.2C charger & discharger @+25°C

* X3 Hybrid inverter can connect 2-4pcs of T58 batteries(1pc of T58 master, and rest 1-3pcs of T58 slave).
* X1 Hybrid inverter can connect 1-3pcs of T58 batteries(1pc of T58 master, without T58 slave, or with 1-2pcs of T58 slave).
* With BMS Parallel Box-II, the maximum battery quantity connected on each inverter varies, please kindly check datasheet of BMS Parallel Box-II.
* Maximum Charge/Discharge Current may be variant with different inverter models
* HV11550 V1 and HV11550 V2 share the same appearance.

Doncaster Cables

Patented EV-Ultra® Cat5

Specially Developed to meet the requirements of EV charge points with data connectivity



Available in both CarbonTek® PVC Tuff-Sheathed or CarbonTek® SWA variants.

Conductor: Plain Annealed Copper Class 2 Stranded to BS EN 60228
Insulation: Thermosetting XLPE Type GP8 to BS 7655-1.3
Bedding: CarbonTek®
Steel Wire Armour: Galvanised steel wire armour (where applicable)
Sheathing: CarbonTek®
Energy Monitor Cable: Cat5e FTP—Foil Screened 4 twisted pair

Now using **CARBONTEK®**

Manufactured in the UK

This cable is designed for use in the installation of electric vehicle charge points. The cable incorporates power conductors and an enhanced Cat 5 screened data cable, encapsulated in a double sheathed design for extra protection. Whilst designed for use in electric vehicle charge points, the cable is also suitable for other installations where power and data is required.

Also available with two Cat5e data cables to satisfy various installations.

These cables are designed to be installed in air, clipped to surface, on cable tray/ladder work and embedded in concrete. The cables can be laid direct in the ground providing that suitable mechanical protection is in place.

STANDARD CORE COLOURS

3 core

5 core

MINIMUM OPERATING TEMPERATURE
-15°C

MAXIMUM OPERATING TEMPERATURE
90°C

MINIMUM BENDING RADIUS
8xØ

The British Cable Company You Can Trust

Sales Office: Millfield Industrial Estate, Arksey Lane, Bentley, Doncaster, South Yorkshire, DN5 0SJ
Tel: 01302 821700 Email: sales@doncastercables.com

Doncaster Cables

Patented EV-Ultra® Cat5

Specially Developed to meet the requirements of EV charge points with data connectivity



Dimensional Details:

Product Code	Number and nominal CSA of conductors	Nominal stranding of conductor	Nominal radial thickness of insulation	Nominal overall diameter of bedding	Galv. Steel Wire Armour	Nominal radial thickness of sheath	Approx. overall diameter	Approx. weight
EV-ULTRA3C4.0CAT5	3 x 4.0mm² + Cat5e FTP	7/0.85mm	0.7mm	12.5mm	N/A	1.0mm	14.8mm	389kg/km
EV-ULTRA3C4.0CAT5SWA	3 x 4.0mm² + Cat5e FTP	7/0.85mm	0.7mm	12.5mm	0.9mm	1.0mm	16.5mm	568kg/km
EV-ULTRA3C6.0CAT5	3 x 6.0mm² + Cat5e FTP	7/1.04mm	0.7mm	13.6mm	N/A	1.0mm	16.0mm	497kg/km
EV-ULTRA3C6.0CAT5SWA	3 x 6.0mm² + Cat5e FTP	7/1.04mm	0.7mm	13.6mm	1.25mm	1.0mm	18.6mm	823kg/km
EV-ULTRA3C710CAT5	3 x 10.0mm² + Cat5e FTP	7/1.35mm	0.7mm	15.0mm	N/A	1.0mm	17.6mm	532kg/km
EV-ULTRA3C710CAT5SWA	3 x 10.0mm² + Cat5e FTP	7/1.35mm	0.7mm	15.0mm	1.25mm	1.0mm	20.2mm	873kg/km
EV-ULTRA3C716CAT5	3 x 16.0mm² + Cat5e FTP	7/1.70mm	0.7mm	17.4mm	N/A	1.0mm	20.0mm	753kg/km
EV-ULTRA3C716CAT5SWA	3 x 16.0mm² + Cat5e FTP	7/1.70mm	0.7mm	17.4mm	1.25mm	1.0mm	22.5mm	1133kg/km
EV-ULTRA5C6.0CAT5	5 x 6.0mm² + Cat5e FTP	7/1.04mm	0.7mm	15.5mm	N/A	1.0mm	17.9mm	536kg/km
EV-ULTRA5C6.0CAT5SWA	5 x 6.0mm² + Cat5e FTP	7/1.04mm	0.7mm	15.5mm	1.25mm	1.0mm	20.5mm	873kg/km
EV-ULTRA5C710CAT5	5 x 10.0mm² + Cat5e FTP	7/1.35mm	0.7mm	18.4mm	N/A	1.0mm	19.8mm	746kg/km
EV-ULTRA5C710CAT5SWA	5 x 10.0mm² + Cat5e FTP	7/1.35mm	0.7mm	18.4mm	1.25mm	1.0mm	23.4mm	1121kg/km
EV-ULTRA5C716CAT5SWA	5 x 16.0mm² + Cat5e FTP	7/1.70mm	0.7mm	21.7mm	1.25mm	1.0mm	27.7mm	1807kg/km

Weight and dimensional information is provided as an approximate guide only.

Sales Office: Millfield Industrial Estate, Arksey Lane, Bentley, Doncaster, South Yorkshire, DN5 0SJ
Tel: 01302 821700 Email: sales@doncastercables.com

Doncaster Cables

Patented EV-Ultra® Cat5

Specially Developed to meet the requirements of EV charge points with data connectivity



Dimensional Details:
EV-Ultra Plus

Product Code	Number and nominal CSA of conductors	Nominal stranding of conductor	Nominal radial thickness of insulation	Nominal overall diameter of bedding	Galv. Steel Wire Armour	Nominal radial thickness of sheath	Approx. overall diameter	Approx. weight
EV-ULTRAPLUS3C6.0	3 x 6.0mm² + Cat5e FTP + Cat5e FTP	7/1.04mm	0.7mm	15.7mm	N/A	1.0mm	18.2mm	600kg/km
EV-ULTRAPLUS3C6.0SWA	3 x 6.0mm² + Cat5e FTP + Cat5e FTP	7/1.04mm	0.7mm	15.7mm	1.25mm	1.0mm	20.6mm	890kg/km

Electrical Properties:

	Single Phase			
	4.0mm²	**6.0mm²**	**10.0mm²**	**16.0mm²**
Maximum current rating (A)	45	58	80	107
Voltage drop (mV/A/m)	12	7.9	4.7	2.9

	3 Phase		
	6.0mm²	**10.0mm²**	**16.0mm²**
Maximum current rating (A)	52	71	91
Voltage drop (mV/A/m)	6.8	4.0	2.5

Current carrying capacities based on ambient temperature of 30°C and conductor operating temperature of 90°C.
Refer to BS7671 for further details including grouping factors and ambient temperatures other than 30°C

Features and Benefits

- Power and data combined in one cable
- Less storage space required
- Easier to handle
- Easier to route through walls and buildings
- Saves installation time
- Gives a cleaner, neater looking installation

Sales Office: Millfield Industrial Estate, Arksey Lane, Bentley, Doncaster, South Yorkshire, DN5 0SJ
Tel: 01302 821700 Email: sales@doncastercables.com

Doncaster Cables

Patented EV-Ultra® – Cat5

Specially Developed to meet the requirements of EV charge points with data connectivity



Running data and power in a single cable is a concern for many electricians, with most believing that segregation of power (Band II) and data (Band I) is always required.

It is however already common to find power and data inside one cable in many existing applications, an example is DALI networks which incorporate data within a 5 core power cable.

It is recommended that the screening of the data cable is terminated to earth.

What do the regulations say?

Voltage Band I is defined as levels of voltage which are too low to provide serious electric shocks; effectively this limits the band to extra-low voltage (ELV), including telecommunications, signalling, bell, control and alarm circuits.

Voltage Band II is defined as all voltages which are used in electrical installations not included in Band I. This means that all 230V supplies are included in Band II.

Proximity of electrical services *(extract from 528.1) - Except where one of the following methods is adopted, neither a Band I nor a Band II circuit shall be contained in the same wiring system as a circuit of nominal voltage exceeding that of low voltage, and a Band I circuit shall not be contained in the same wiring system as a Band II circuit. (i) - Every cable or conductor is insulated for the highest voltage present.*

EV-Ultra® consists of power conductors and data cables that are rated to the same nominal voltage – therefore segregation of power and data is not required.

Proximity of communications cables *(extract from 528.2) - Special considerations of electrical interference, both electromagnetic and electrostatic, may apply to telecommunication circuits, data transfer circuits and the like.*

EV-Ultra® has been designed with these considerations in mind, it incorporates screened, twisted pair data cables and is also constructed with a lay length that reduces interference. Laboratory and on-site installation tests have also been conducted and no interference or degredation of signal was recorded.

Sales Office: Millfield Industrial Estate, Arksey Lane, Bentley, Doncaster, South Yorkshire, DN5 0SJ
Tel: 01302 821700 Email: sales@doncastercables.com

Doncaster Cables

Patented EV-Ultra®

Specially Developed to meet the requirements of EV charge points with data connectivity



Available in both CarbonTek® PVC Tuff-Sheathed or CarbonTek® SWA variants.

Conductor: Plain Annealed Copper Class 2 Stranded to BS EN 60228
Insulation: Thermosetting XLPE Type GP8 to BS 7655-1.3
Bedding: CarbonTek®
Steel Wire Armour: Galvanised steel wire armour (where applicable)
Sheathing: CarbonTek®
Energy Monitor Cable: 2 core screened energy monitor cable

Now using **CARBONTEK®**

Manufactured in the UK

This cable is designed for use in the installation of electric vehicle charge points. The cable incorporates power conductors and a 2 core screened data cable, encapsulated in a double sheathed design for extra protection. Whilst designed for use in electric vehicle charge points, the cable is also suitable for other installations where power and a 2 core data/signal cable is required.

These cables are designed to be installed in air, clipped to surface, on cable tray/ladder work and embedded in concrete. The cables can be laid direct in the ground providing that suitable mechanical protection is in place.

STANDARD CORE COLOURS
3 core

MINIMUM OPERATING TEMPERATURE
-15°C

MAXIMUM OPERATING TEMPERATURE
90°C

MINIMUM BENDING RADIUS
8xØ

The British Cable Company You Can Trust

Sales Office: Millfield Industrial Estate, Arksey Lane, Bentley, Doncaster, South Yorkshire, DN5 0SJ
Tel: 01302 821700 Email: sales@doncastercables.com

Doncaster Cables

Patented EV-Ultra®

Specially Developed to meet the requirements of EV charge points with data connectivity



Dimensional Details:

Product Code	Number and nominal CSA of conductors	Nominal stranding of conductor	Nominal radial thickness of insulation	Nominal overall diameter of bedding	Galv. Steel Wire Armour	Nominal radial thickness of sheath	Approx. overall diameter	Approx. weight
EV-ULTRA3C4.0	3 x 4.0mm² + DATA	7 / 0.85mm	0.7mm	11.0mm	N/A	1.0mm	13.6mm	265kg/km
EV-ULTRA3C4.0SWA	3 x 4.0mm² + DATA	7/0.85mm	0.7mm	11.0mm	0.9mm	1.0mm	15.0mm	480kg/km
EV-ULTRA3C6.0	3 x 6.0mm² + DATA	7/1.04mm	0.7mm	12.0mm	N/A	1.0mm	14.4mm	350kg/km
EV-ULTRA3C6.0SWA	3 x 6.0mm² + DATA	7/1.04mm	0.7mm	12.0mm	1.25mm	1.0mm	16.8mm	625kg/km

Electrical Properties:

	4.0mm²	6.0mm²
Maximum current rating (A)	45	58
Voltage drop (mV/A/m)	12	7.9

Weight and dimensional information is provided as an approximate guide only.

Current carrying capacities based on ambient temperature of 30°C and conductor operating temperature of 90°C.
Refer to BS7671 for further details including grouping factors and ambient temperatures other than 30°C

Features and Benefits

- Power and data combined in one cable
- Less storage space required
- Easier to handle
- Easier to route through walls and buildings
- Saves installation time
- Gives a cleaner, neater looking installation

Sales Office: Millfield Industrial Estate, Arksey Lane, Bentley, Doncaster, South Yorkshire, DN5 0SJ
Tel: 01302 821700 Email: sales@doncastercables.com

Doncaster Cables

Patented EV-Ultra®

Specially Developed to meet the requirements of EV charge points with data connectivity



Running data and power in a single cable is a concern for many electricians, with most believing that segregation of power (Band II) and data (Band I) is always required.

It is however already common to find power and data inside one cable in many existing applications, an example is DALI networks which incorporate data within a 5 core power cable.

What do the regulations say?

Voltage Band I is defined as levels of voltage which are too low to provide serious electric shocks; effectively this limits the band to extra-low voltage (ELV), including telecommunications, signalling, bell, control and alarm circuits.

Voltage Band II is defined as all voltages which are used in electrical installations not included in Band I. This means that all 230V supplies are included in Band II.

Proximity of electrical services *(extract from 528.1) - Except where one of the following methods is adopted, neither a Band I nor a Band II circuit shall be contained in the same wiring system as a circuit of nominal voltage exceeding that of low voltage, and a Band I circuit shall not be contained in the same wiring system as a Band II circuit. (i) - Every cable or conductor is insulated for the highest voltage present.*

EV-Ultra® consists of power conductors and data cables that are rated to the same nominal voltage – therefore segregation of power and data is not required.

Proximity of communications cables *(extract from 528.2) - Special considerations of electrical interference, both electromagnetic and electrostatic, may apply to telecommunication circuits, data transfer circuits and the like.*

EV-Ultra® has been designed with these considerations in mind, it incorporates screened, twisted pair data cables and is also constructed with a lay length that reduces interference. Laboratory and on-site installation tests have also been conducted and no interference or degredation of signal was recorded.

Sales Office: Millfield Industrial Estate, Arksey Lane, Bentley, Doncaster, South Yorkshire, DN5 0SJ
Tel: 01302 821700 Email: sales@doncastercables.com