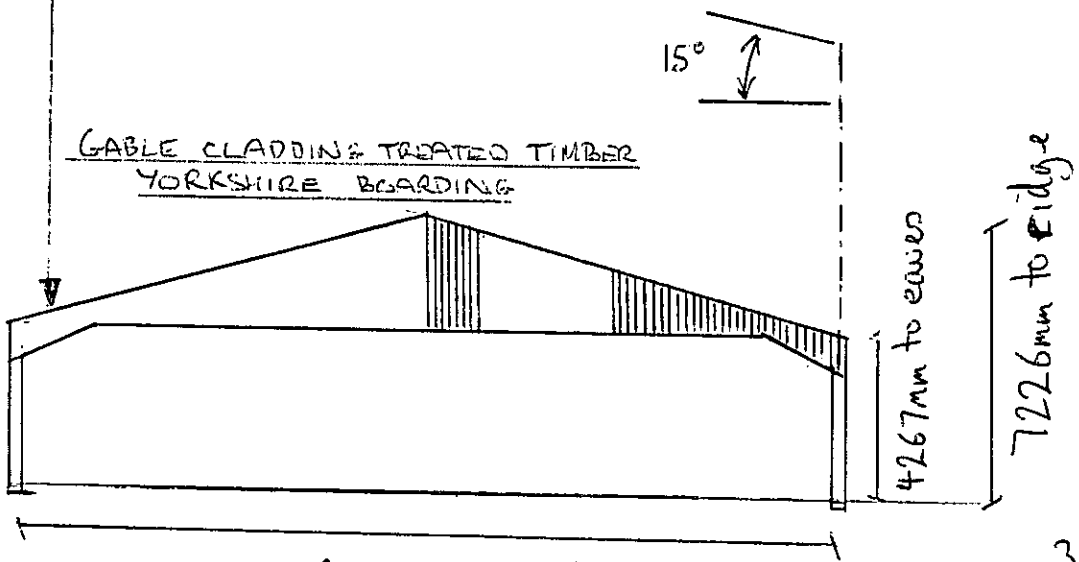

1:200

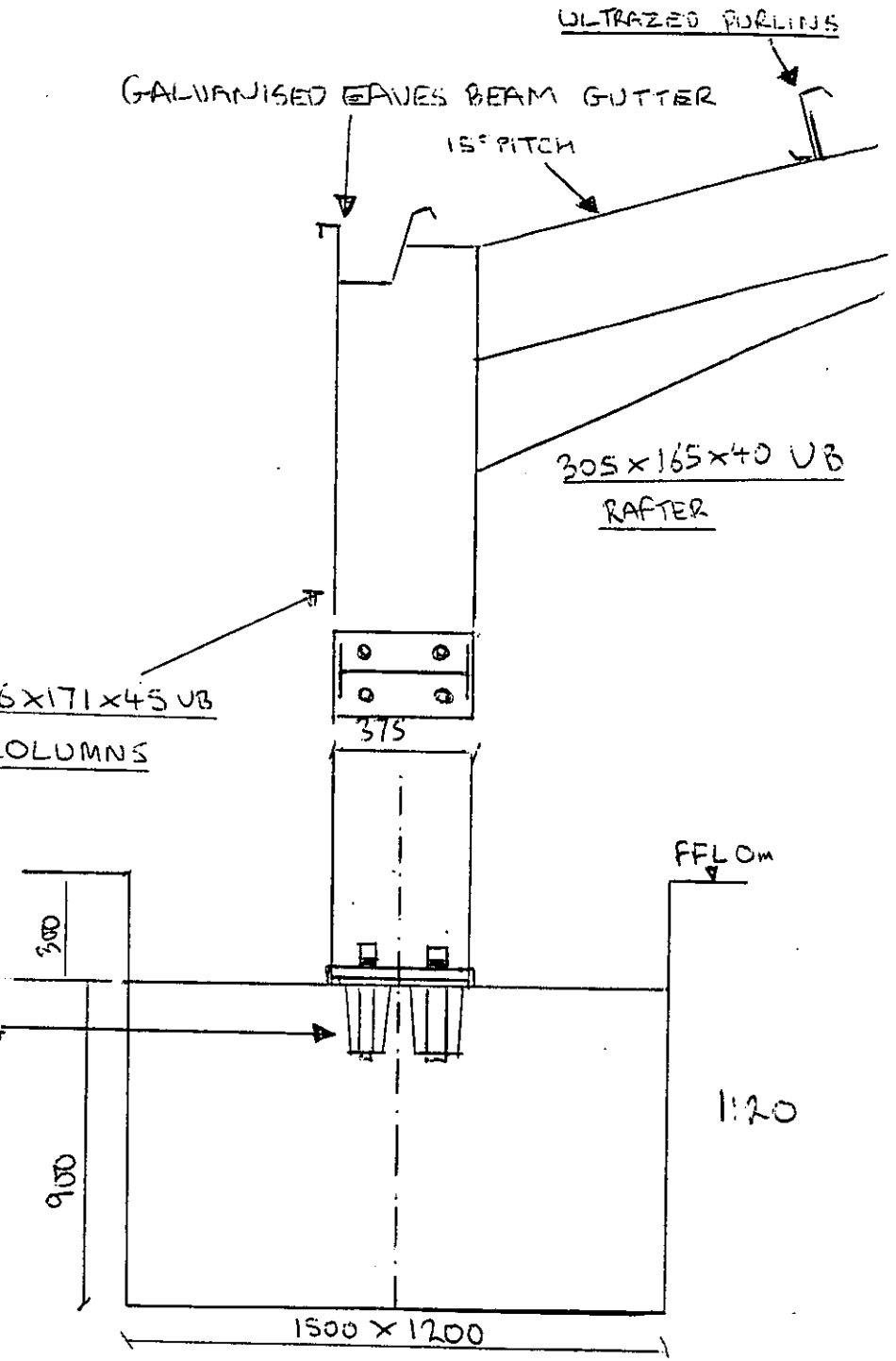

MAIN COLUMNS FOUNDATION DETAIL

PASSMORE - COOMBE
CHURCH FARM
COOMBES
LANGING
WEST SUSSEX
BN15 ORS.

ADUR DISTRICT COUNCIL
PLANNING DIVISION
Adur 6083/12
- 1 FEB 2012

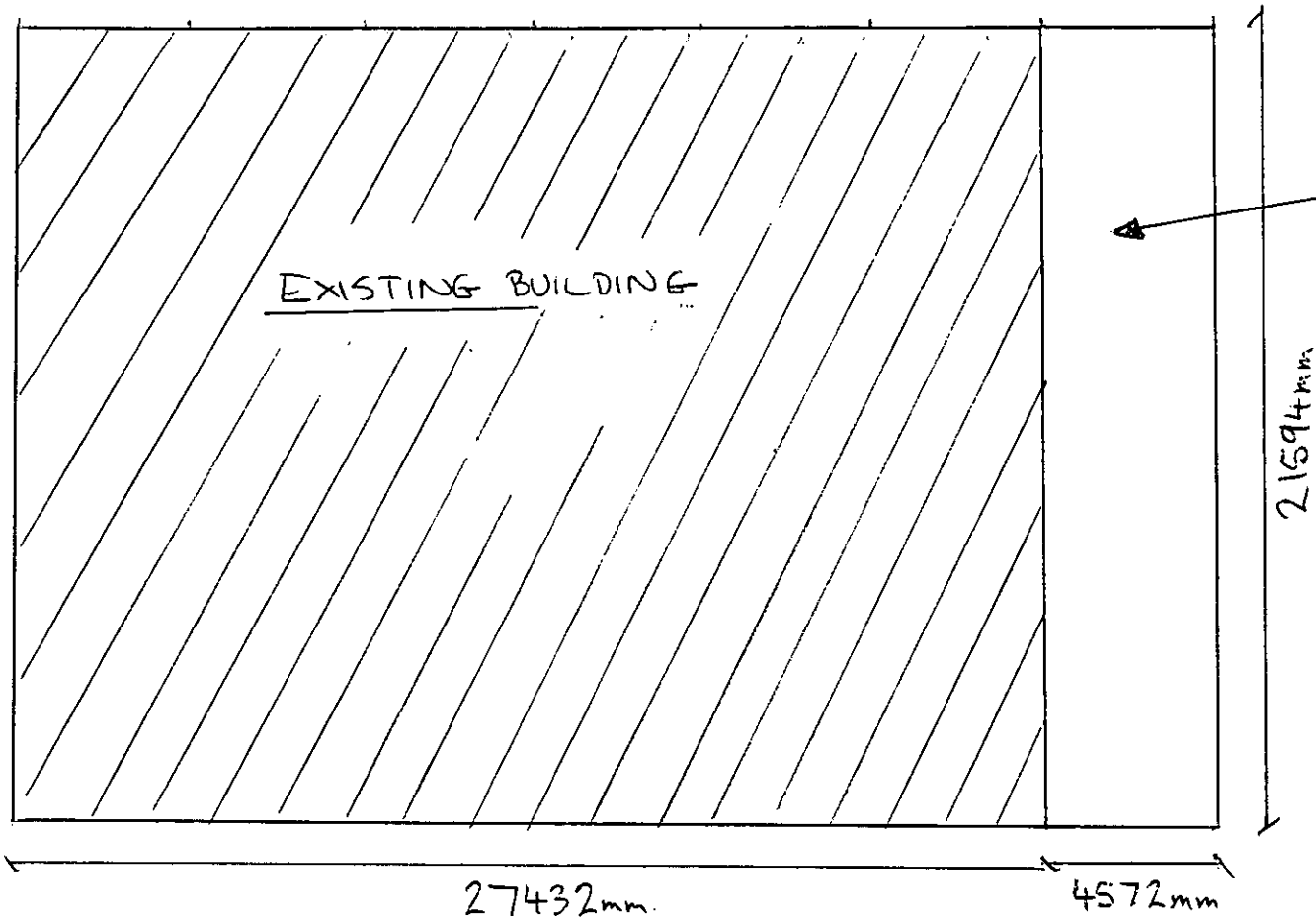

PASSMORE-COOMBE
CHURCH FARM
COOMBES
LANCING
WEST SUSSEX
BN15 0RS.

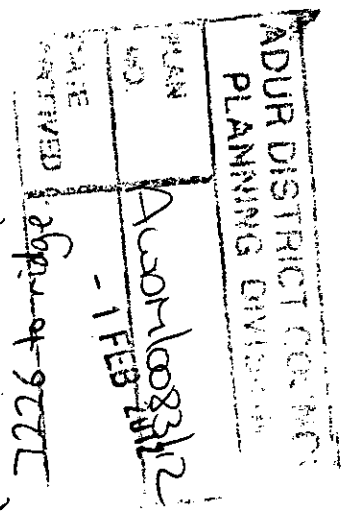

Roof cladding Natural Grey Fibre Cement with Vent Ridges

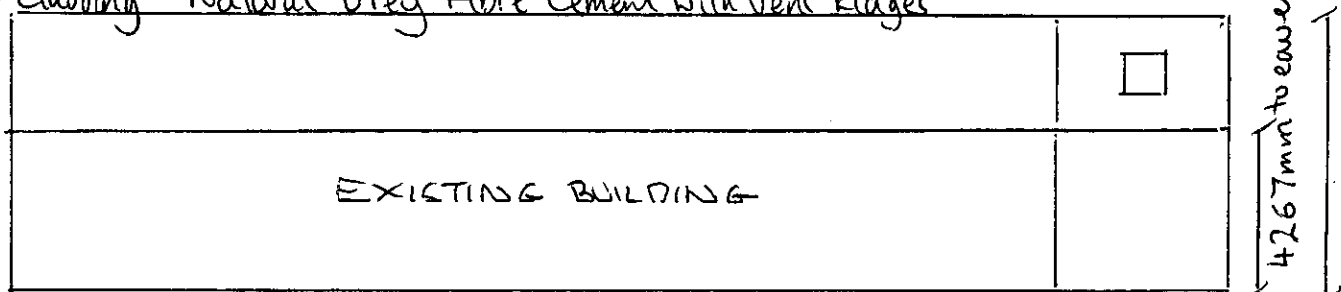

No side cladding on extension.

1:200

DO NOT SCALE