Existing

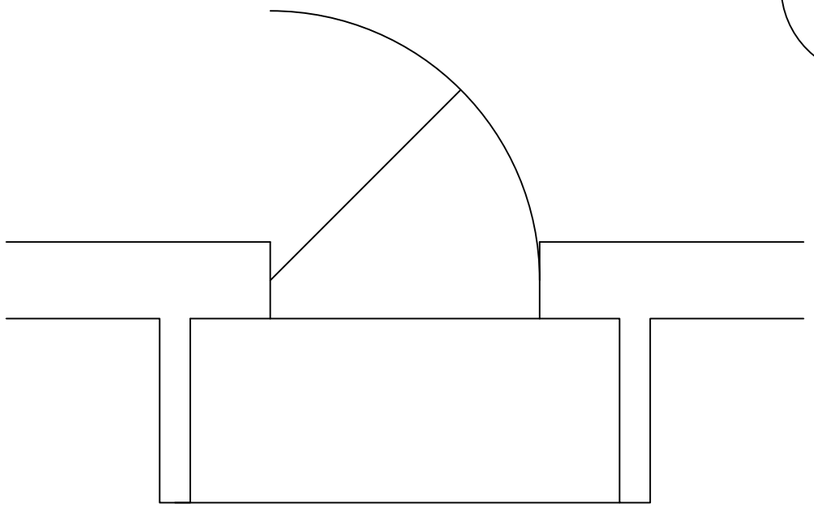

N

Proposed

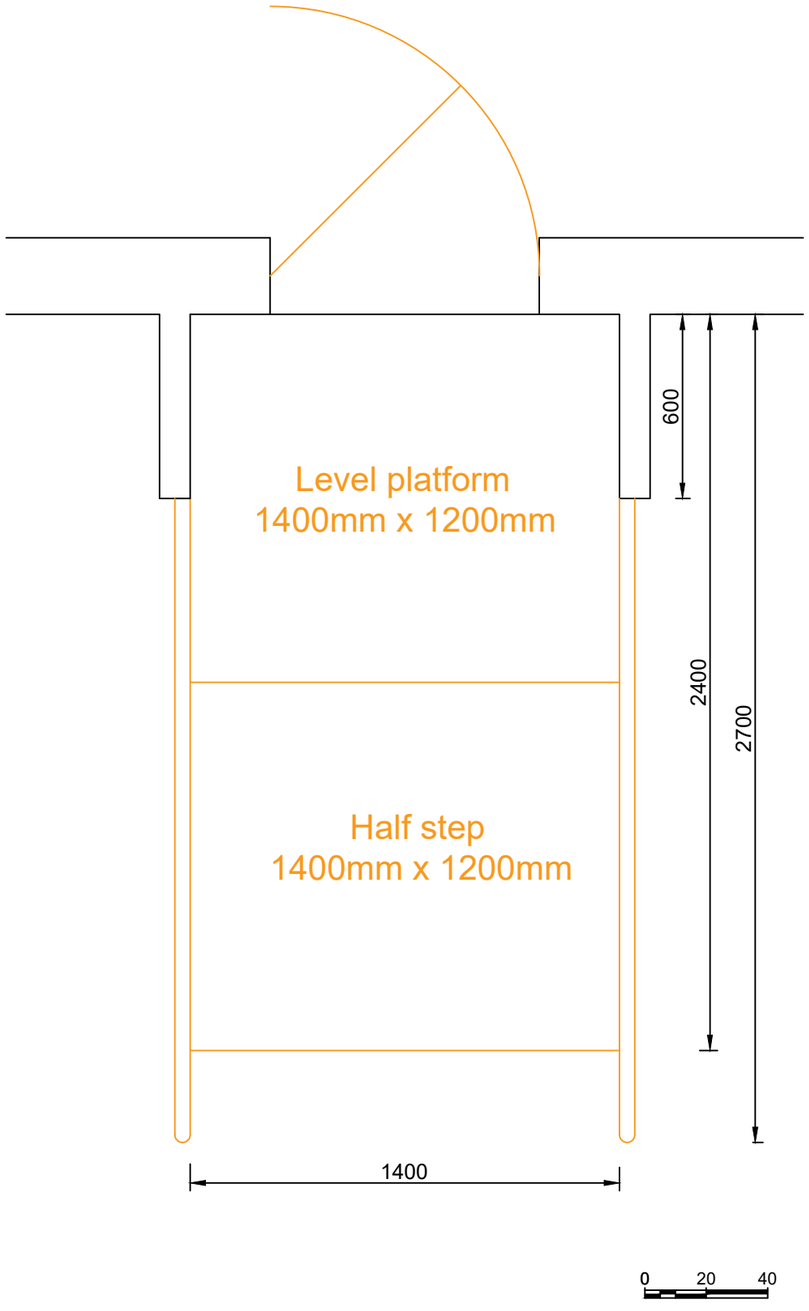

Mr Joseph Berrett
23 Wilmot Road
Shoreham-By-Sea
BN43 6BN

Front Access Adaptations

Scale: 1:20
Date: MAR 2021
Drawn: Zeki Kurekci

023/WIL

/02

ADUR & WORTHING HOME IMPROVEMENT ASSISTANCE
ADUR & WORTHING COUNCILS
PORTLAND HOUSE
RICHMOND ROAD
WORTHING
BN11 1HS