THIS DRAWING IS THE PROPERTY OF STEPHEN BROMLEY ASSOCIATES AND MUST NOT BE REPRODUCED IN PART OR IN WHOLE OR USED FOR THE EXECUTION OF WORKS WITHOUT THEIR PERMISSION NOT SCALE. ALL DIMENSIONS TO BE CHECKED ON SITE PRIOR TO COMMENCEMENT OF ANY CONSTRUCTION WORKS AND STEPHEN BROMLEY ASSOCIATES NOTIFIED OF ANY DISCREPANCIES.

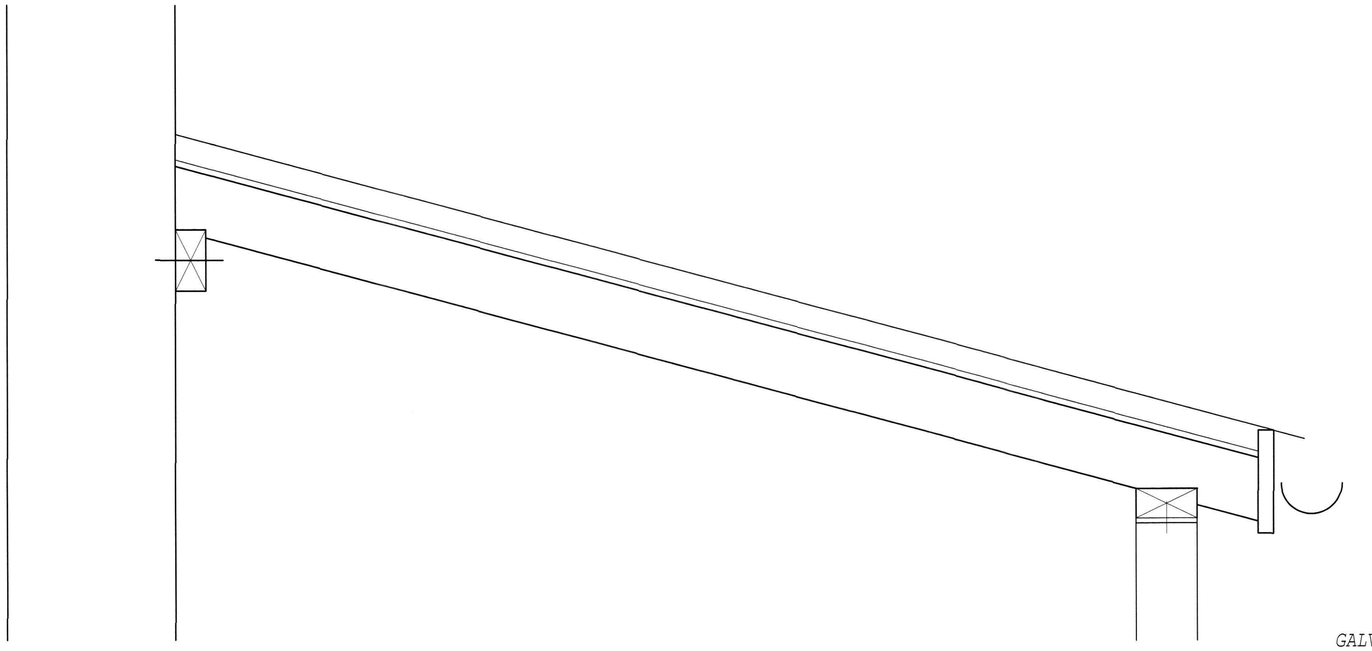

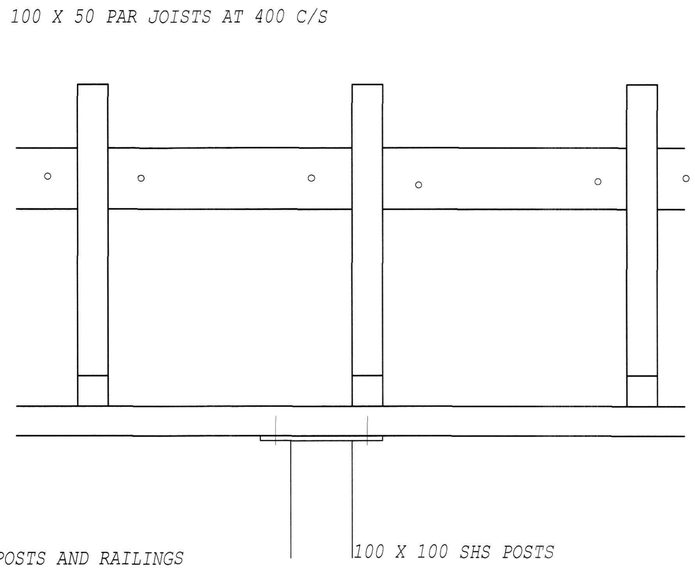



SECTION

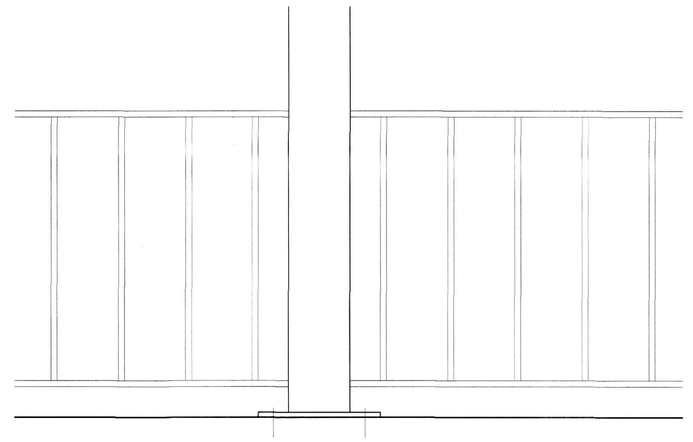

ELEVATION A

ADDR & WORKING
PLANNING SERVICES
PLAN AWDM/1296/12
DATE RECD 12 FEB 2014

STEPHEN BROMLEY ASSOCIATES
5 WEST ST SHOREHAM BY SEA
WEST SUSSEX

SECTION DETAIL VERANDA

AT SCALE 1-5

7 9 BRUNSWICK ROAD

Drawing no 9622-13