All existing windows were single glazed timber framed. All replacement windows are white uPVC Profile 22 A+ rated windows. All windows are clear glazed except the bathroom. Scale is 1:20

Landing 1800x1200mm

Existing

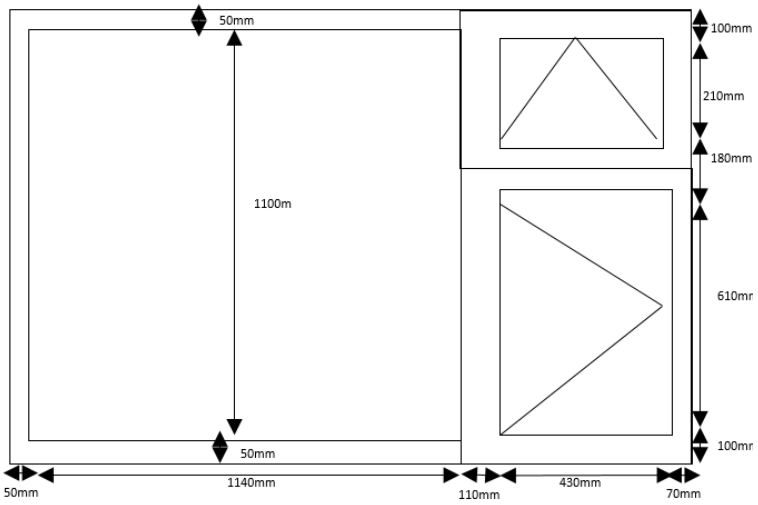

Replacement

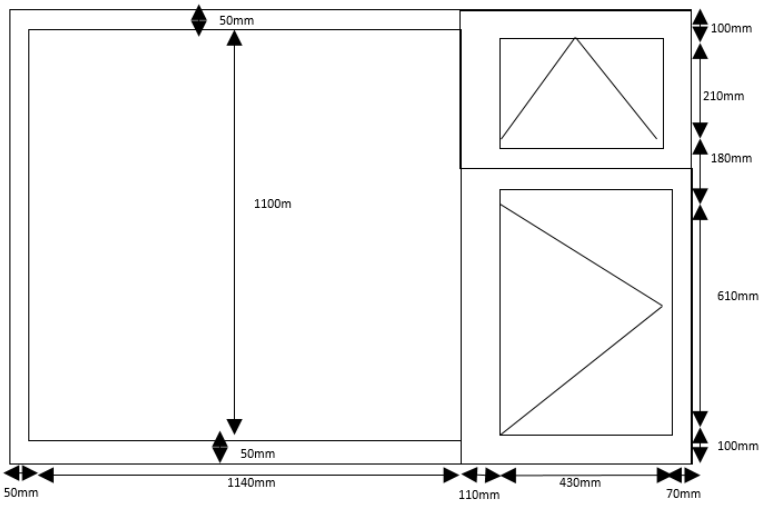

Bathroom 1200x1200mm (both existing & replacement have obscured glass)

Existing

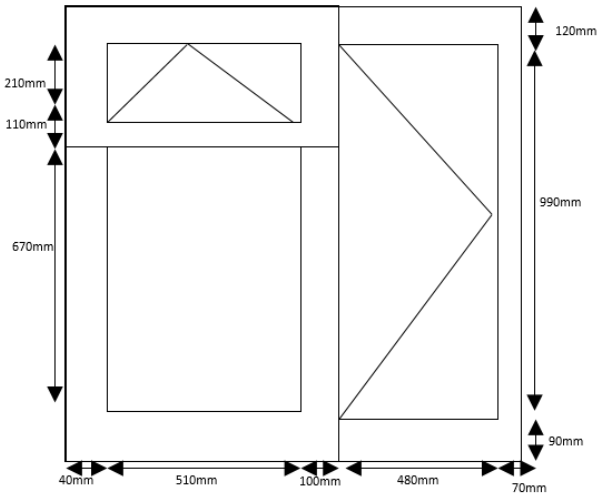

Replacement

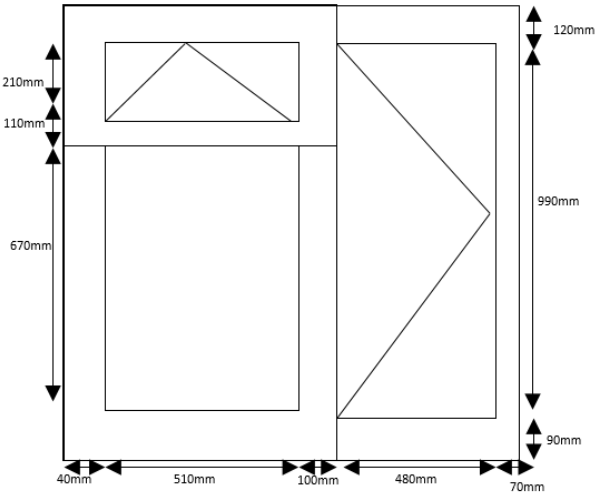

Kitchen 1 1200x600mm

Existing

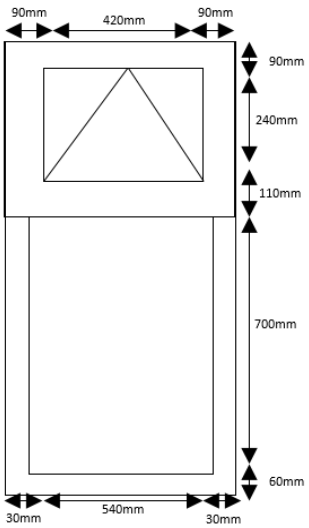

Replacement

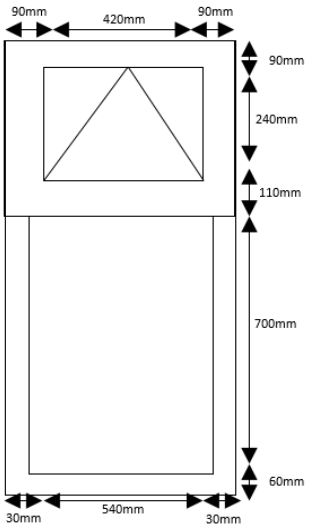

Kitchen 2 1200x1200mm

Existing

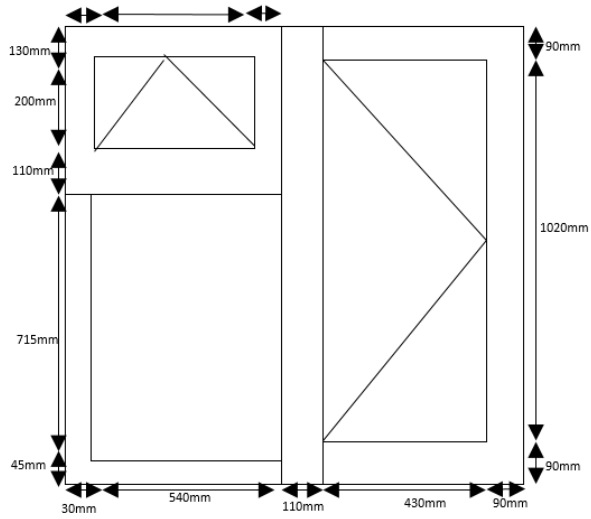

Replacement

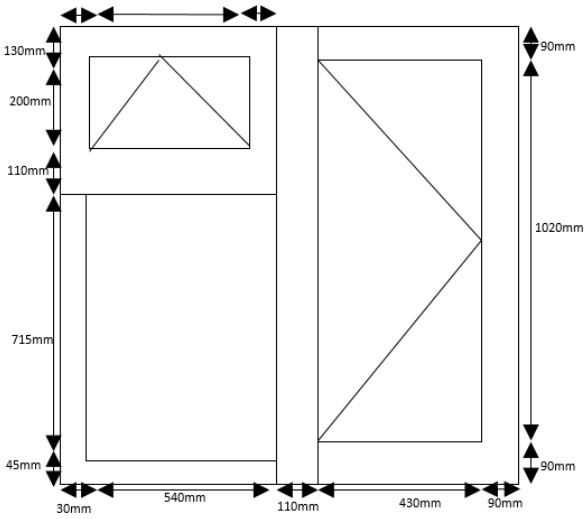

Bedroom 1 2350x1300mm

Existing

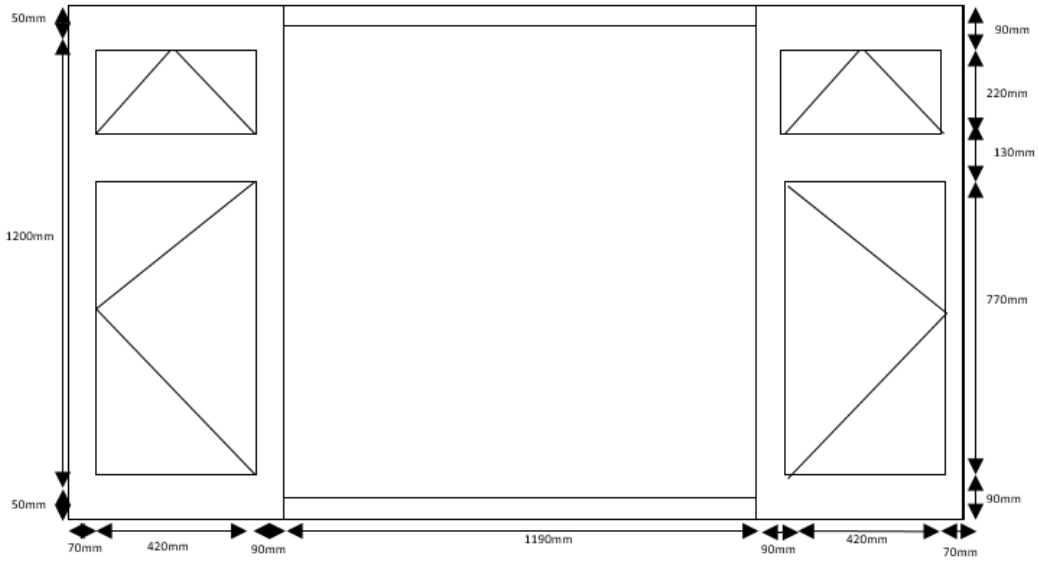

Replacement

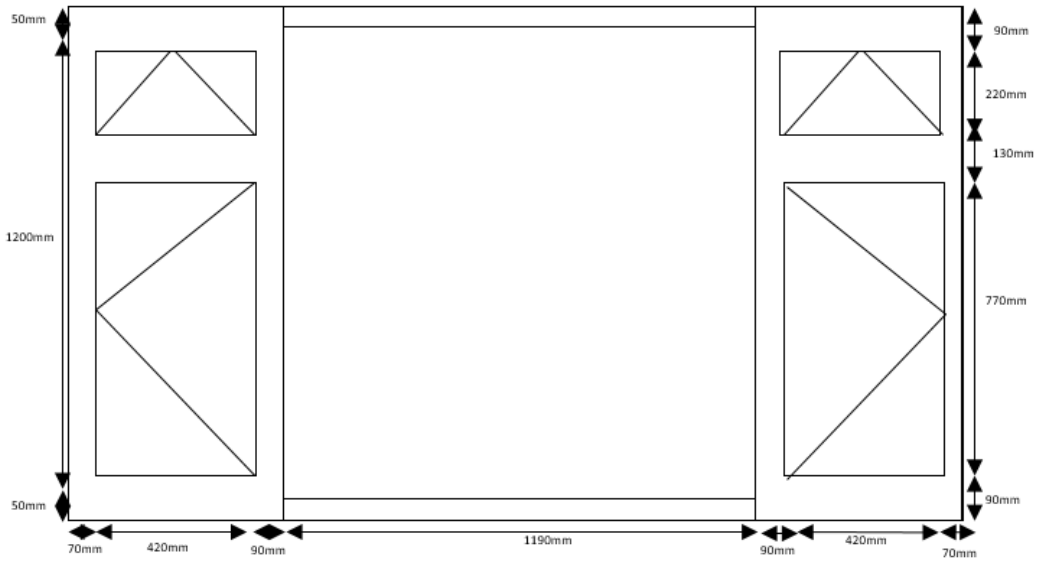

Bedroom 2 1200x1300mm

Existing

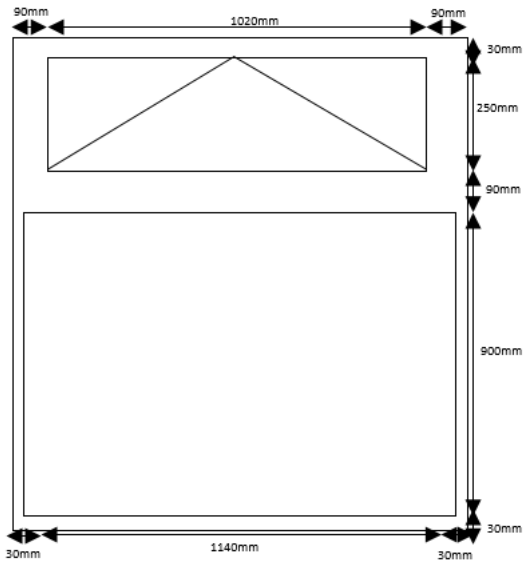

Replacement

