Householder Application
A1. Applicant Details

PUN No A2067 7967
DATE 20 DEC 2007

Organisation			
	Title	Forename	Surname
Name	Mrs	Sibella	Pannell

A1.1 Address Details

Name or flat number	
Property number or name	Unit 1 & 2 Riverside Yard
Street	Albion Street
Locality	feouthwick
Town	Brighton
County	Sussex
Postal Town	Brighton
Postcode	BN42 4AW

A1.2 Communication Details

	Telephone No.	Extn No.
Telephone No.		
Daytime Telephone No.		
Fax No.		
Email Address		
DX Number		

A2. Agent Details

Organisation	Derek Copeman Architects		
	Title	**Forename**	**Surname**
Name	Mr	Derek	Copeman

A2.1 Address Details

Name or flat number	Unit 2
Property number or name	Riverside Yard
Street	Albion Street
Locality	Southwick
Town	Brighton
County	Sussex
Postal Town	Brighton
Postcode	BN42 4AW

A2.2 Communication Details

	Telephone No.	**Extn No.**
Telephone No.	01273591822	
Daytime Telephone No.	01273591822	
Fax No.	08700053518	
Email Address	derek.copeman@btopenworld.com	
DX Number		

1. Site Address Details

1.1 Address Details

Name or flat number	
Property number or name	Unit 1 & 2 Riverside Yard
Street	Albion Street
Locality	Southwick
Town	BRIGHTON
County	Sussex
Postal Town	Brighton
Postcode	BN42 4AW
UPRN	0
Location	

2. Description of the Proposed Development

Development Description

Amendments to Balcony finishes;

3. Access

Is existing access affected?	**Pedestrian**	_ Yes	X No
	Vehicular	_ Yes	X No
Is a new access type proposed?	**Pedestrian**	_ Yes	X No
	Vehicular	_ Yes	X No

Disability Access

N/A

4. Other Information

Does the proposal involve the lopping or topping of trees or the removal of trees, shrubs or hedges? _ Yes X No

5. Public Rights Of Way

Do you propose to alter or divert a Public Right of Way? _ Yes X No

Is the site adjacent to a Public Right Of Way? _ Yes X No

Describe the proposed alteration of the Public Right of Way

6. Materials

Walls

Roof

Site boundaries (fences, walls, etc.), driveways, paved areas and other hard surfaced areas

7. Floor Space

Please state the existing floorspace of the building 0 **sq.m**

Please state the proposed new floorspace 5 **sq.m**

Signature **Electronically submitted; no signature required.**

Certificate A

I certify **that:**
on the day 21 days before the date of the accompanying application nobody, except the applicant, was the owner of any part of the building/land to which the application relates.

Signatory

	Title	Forename	Surname
Signatory	Mr	Derek	Copeman
Signature	Electronically submitted; no signature required.		
Date **(yyyy-mm-dd)**	2007-11-22		

Under the provisions of the Planning Acts, if any person issues a certificate which purports to comply with the requirements of this Act and contains a statement which he knows to be false or misleading in a material particular, he shall be guilty of an offence. Please ensure that the information you have provided is accurate.

Agricultural Holdings Certificate

X None of the land to which the application relates is, or is part of, an agricultural holding. _ I have/the applicant has given the requisite notice to every person other than my/him/herself who, on the day 21 days before the date of this application was a tenant of an agricultural holding on all or part of the land to which the application relates as follows:

Signatory

	Title	Forename	Surname
Signatory	Mr	Derek	fcopeman
Signature	**Electronically submitted; no signature required.**		
Date (yyyy-mm-dd)	2007-11-22		

Under the provisions of the Planning Acts, if any person issues a certificate which purports to comply with the requirements of this Act and contains a statement which he knows to be false or misleading in a material particular, he shall be guilty of an offence. Please ensure that the information you have provided is accurate.

Our Ref: 3234A/2.0/DKC
Date: 22nd November 2007

PLANNING
PLAN No. A0d0779107
DATE
10 DEC 2007

"RIVERSIDE YARD" - SOUTHWICK:

DESIGN AND ACCESS STATEMENT:

The finishes to the balconies are to be varied following a discussion on site with the County Conservation Architect and the applicant. It was agreed that the proposed timber facing to the lower balcony was not necessary and therefore we have submitted a formal application varying the finishes in accordance with the discussion with the Conservation Architect.

The colour that the railings should be painted has not yet been decided and this work will be completed when weather conditions allow and a sample of the paint finish will be submitted to the local authority for approval prior to the work taking place on site.

All other work with the exception of the painting of the steelwork has been implemented in accordance with the conditions of the Planning Inspector's report.

ACCESS STATEMENT:

There will be no changes to the existing pedestrian and vehicular access onto an off the site; there are public rights of way within the application site which will be unchanged by this application see site plan 3234A/01A

PLAN No.
DATE 10 DEC 2001

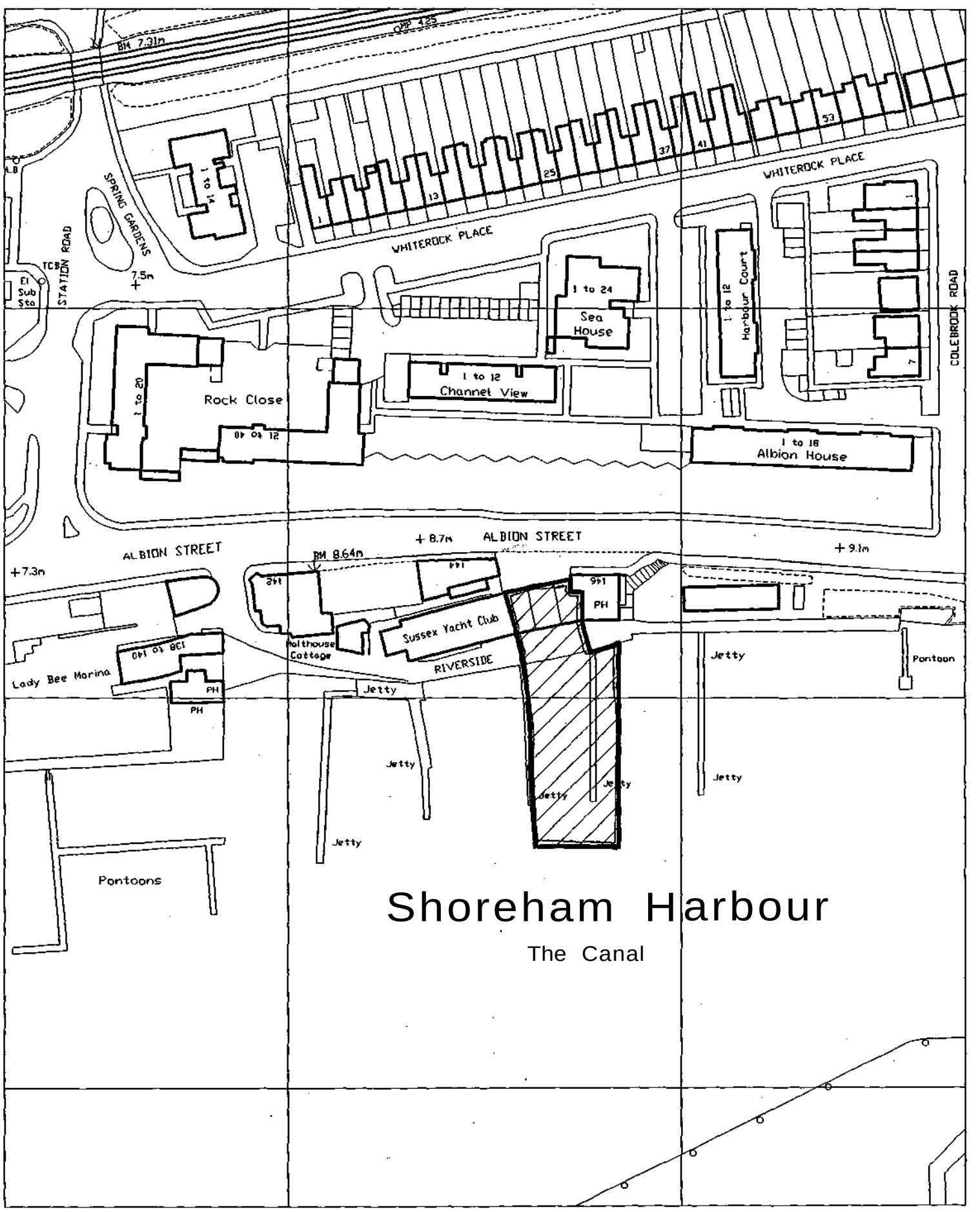

Shoreham Harbour

The Canal

SUBJECT TO SITE SURVEY **AND** ALL RELEVANT STATUTORY AUTHORITY APPROVALS.

Project: **RIVERSIDE** YARD - **SOUTHWICK**			Job No: 3234A
Drawing: **SITE LOCATION** PLAN			Drg.No: 01A
Scale: 1:1250	Date: 14:09:2001	Drawn: DKC	CAD Ref: 3234A-01A.dwg

Derek Copeman Architect

CHARTERED ARCHITECT

22 The Spires Off Oakfield Lane Dartford Kent DA1 2TA
Tel: (01322) 226445 Fax: (01322) 226445

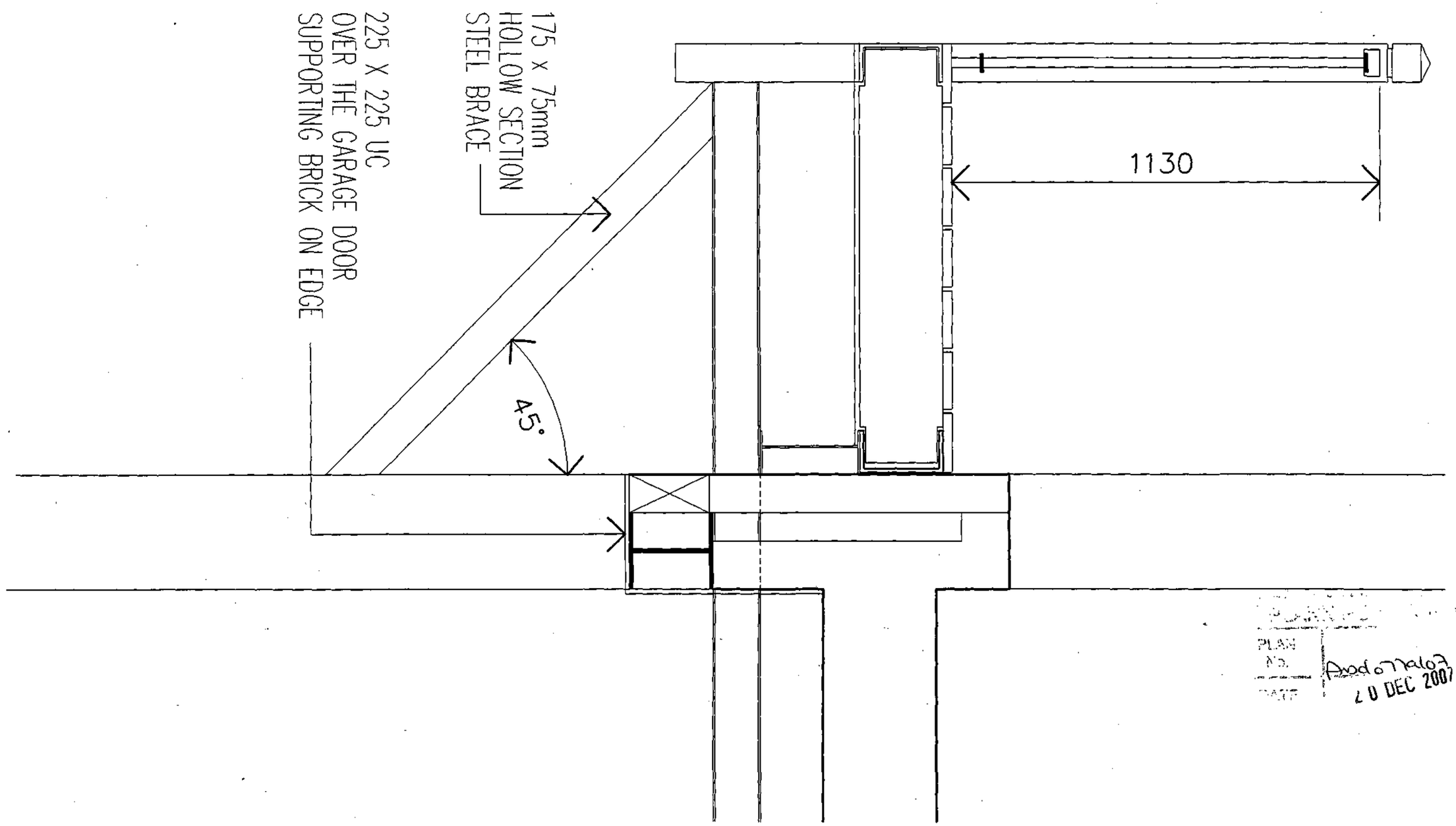

PLAN No. Ard 07/a/07
DATE 20 DEC 2007

SUBJECT TO SITE SURVEY AND ALL RELEVANT STATUTORY AUTHORITY APPROVALS.

Project: RIVERSIDE YARD - SOUTHWICK		Drawing: LOWER BALCONY DESIGN DETAILS UNITS 1 & 2 (SHEET 2 OF 2)	Job No: 3234A
Scale: 1:10	Date: 09:04:2004 Drawn: DKC		Drg.No: DS-08B
			CAD Ref: 3234A-DS-08A.dwg

22 The Spires
Off Oakfield Lane
Dartford Kent DAt 2TA
Telephone: (01322) 226445
Fax (01322) 226445

Derek Copeman Architect

CHARTERED ARCHITECT



Addomalot
20 DEC 2007

GFL - REFERANCED BACK TO BENCH MARK ON ALBION STREET
ALL FLOOR LEVELS RELATE TO THE EXISTING FLOOR LEVELS OF THE SCHOONER INN
SUBJECT TO SITE SURVEY AND ALL RELEVANT STATUTORY AUTHORITY APPROVALS.

Project: RIVERSIDE YARD – SOUTHWICK		Drawing: PROPOSED ELEVATION CANAL SIDE	Job No: 3234A
Scale 1:100	Date: 10:06:2002	Drawn: DKC	Drg.No: 304G
			CAD Ref: 3234A-304G.dwg

22 The Spires
Off Oakfield Lane
Dartford Kent DA1 2TA
Telephone: (07831) 420639
Fax: (0870) 0053518

Derek Copeman Architect

CHARTERED ARCHITECT



GFL - REFERANCED BACK TO BENCH MARK ON ALBION STREET
ALL FLOOR LEVELS RELATE TO THE EXISTING FLOOR LEVELS OF THE SCHOONER INN
SUBJECT TO SITE SURVEY AND ALL RELEVANT STATUTORY AUTHORITY APPROVALS.

Project: RIVERSIDE YARD - SOUTHWICK		Drawing: PROPOSED ELEVATION CANAL SIDE	Job No: 3234A
Scale: 1:100	Date: 10:06:2002 Drawn: DKC		Drg.No: 304H
			CAD Ref: 3234A-304H.dwg

22 The Spires
Off Oakfield Lane
Dartford Kent DA1 2TA
Telephone: (07831) 420639
Fax: (0870) 0053518

Derek Copeman Architect

CHARTERED ARCHITECT

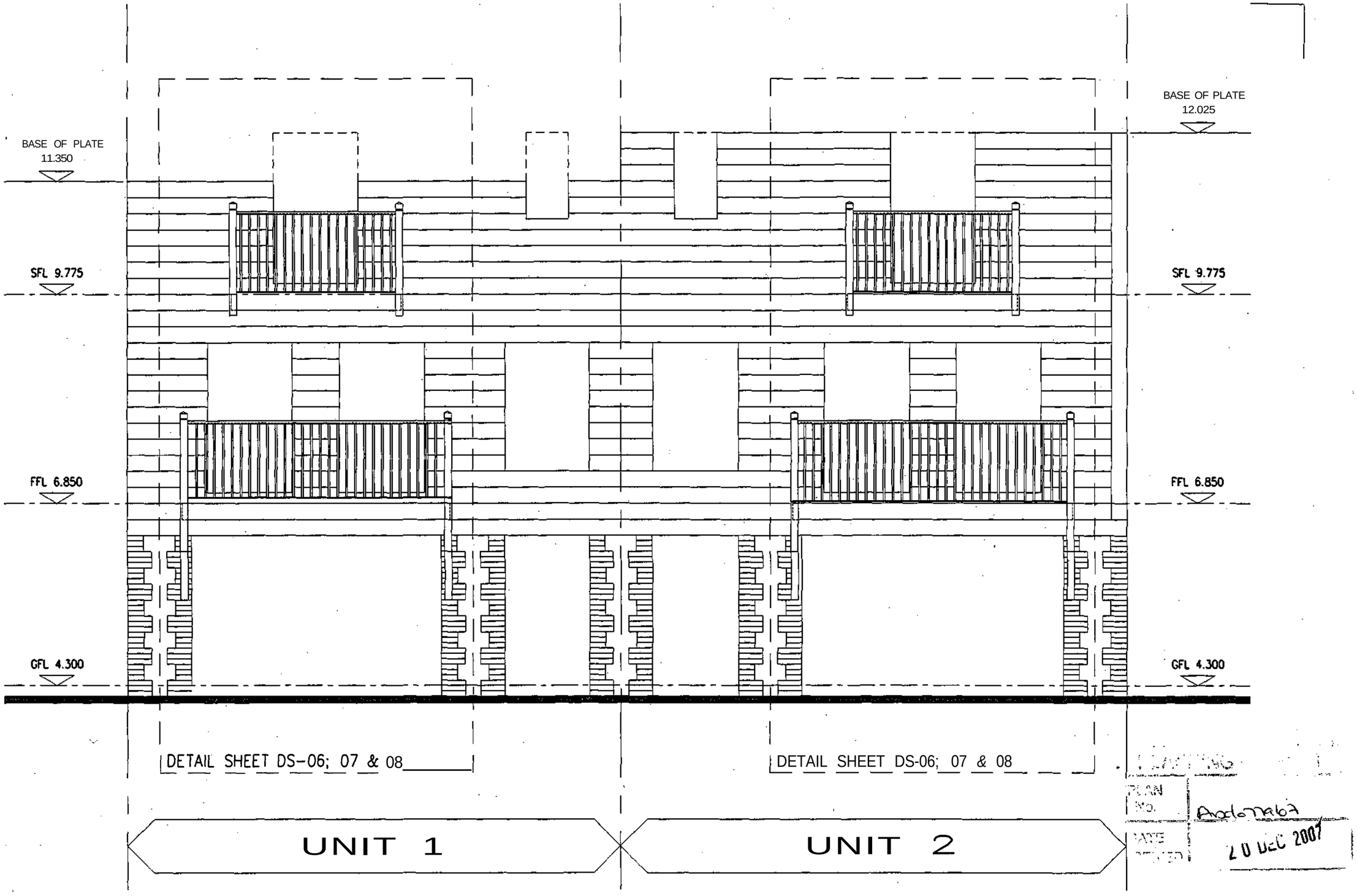

PLAN No. Ano6 7967

DATE RECEIVED 20 DEC 2007

SUBJECT TO SITE SURVEY AND ALL RELEVANT STATUTORY AUTHORITY APPROVALS.

Project: RIVERSIDE YARD - SOUTHWICK		Drawing: KEY TO BALCONY DETAILS PART ELEVATION FACING CANAL	Job No: 3234A
Scale: 1:50	Date: 09:04:2004 Drawn: DKC		Drg.No: DS-05A
			CAD Ref: 3234A-DS-05A.dwg

22 The Spires
Off Oakfield Lane
Dartford Kent DA1 2TA
Telephone: (01322) 226445
Fax: (01322) 226445

Derek Copeman Architect
CHARTERED ARCHITECT

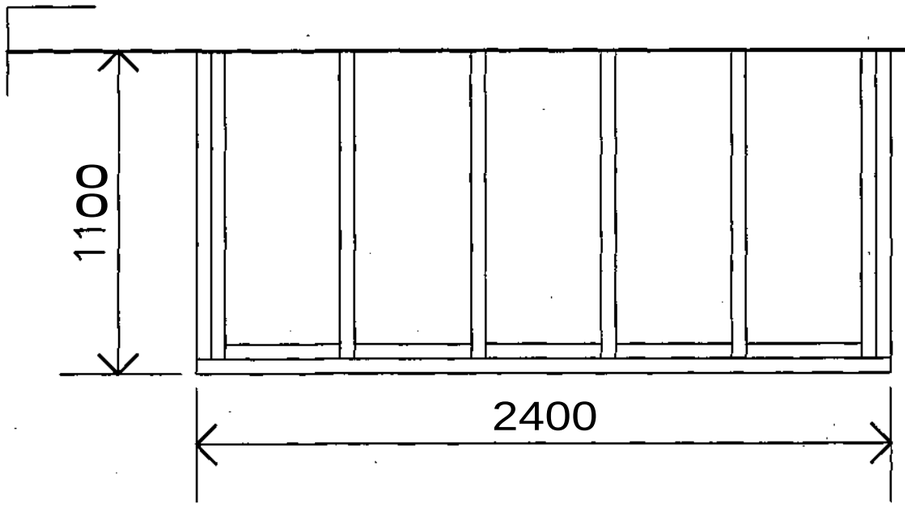

EXTRACT OF JOIST PLAN
Scale 1:20

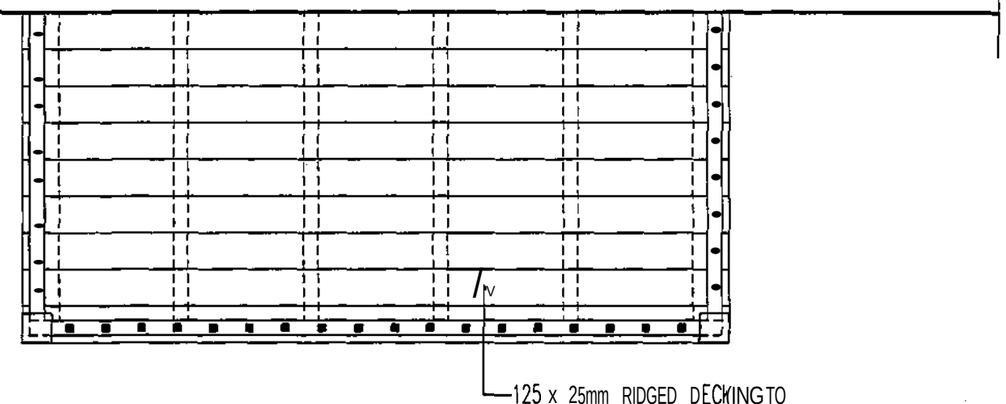

SECTION A.T .A-A
Scale 1:20

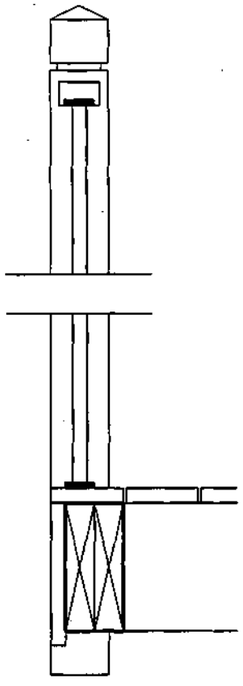

DETAIL SECTION AT B-B
Scale 1:10

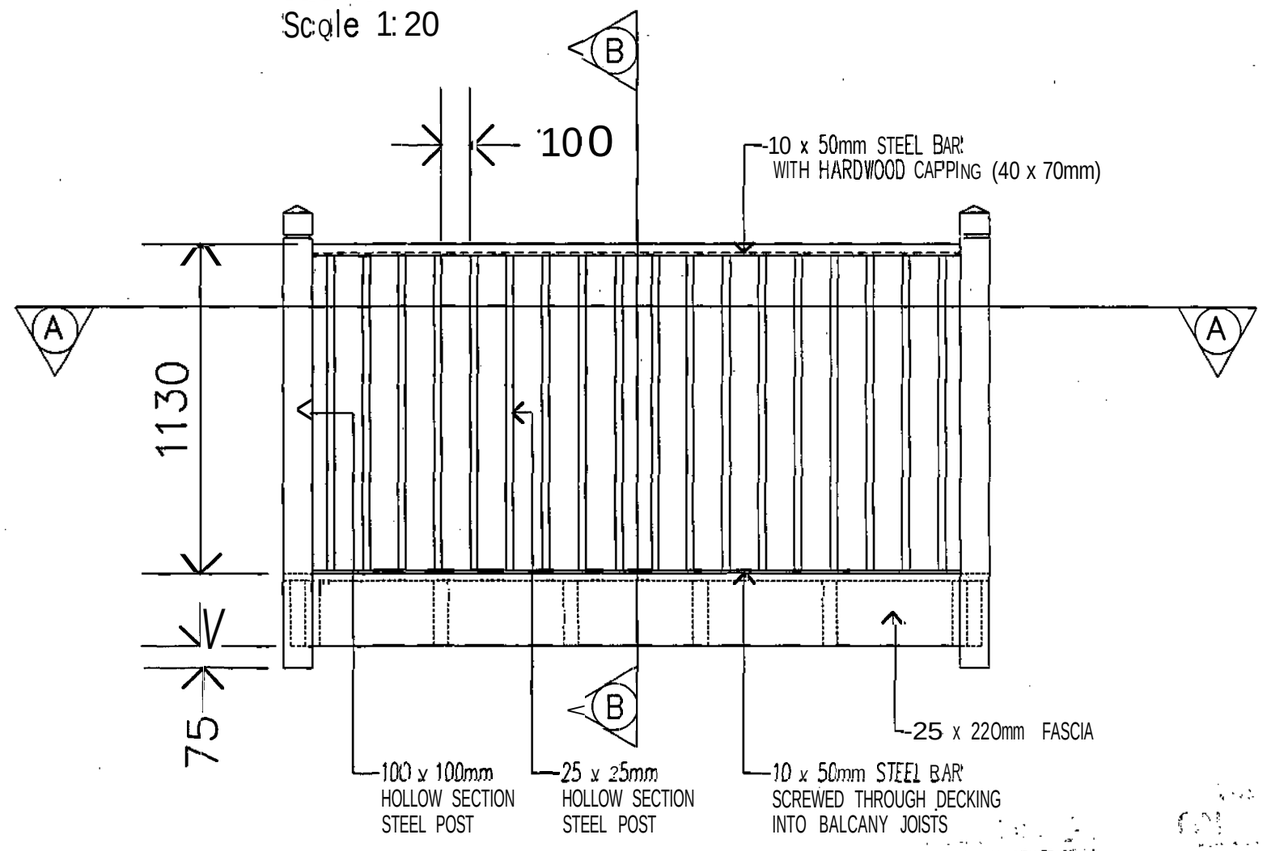

FRONT ELEVATION
Scale 1:20

Approved
20 DEC 2007

SUBJECT TO SITE SURVEY AND ALL RELEVANT STATUTORY AUTHORITY APPROVALS.

Project: RIVERSIDE YARD - SOUTHWICK	Drawing: UPPER BALCONY DESIGN DETAILS UNITS 1 & 2	Job No: 3234A	
Scale: 1:20 & 1:10 Date: 09:04:2004 Drawn: DKC		Org.No: DS-06	
		CAD Ref: 3234A-DS-06.dwg	

22 The Spires
Off Oakfield Lane
Dartford Kent DA1 2TA
Telephone: (01322) 226445
Fax: (01322) 226445

Derek Copeman Architect
CHARTERED ARCHITECT

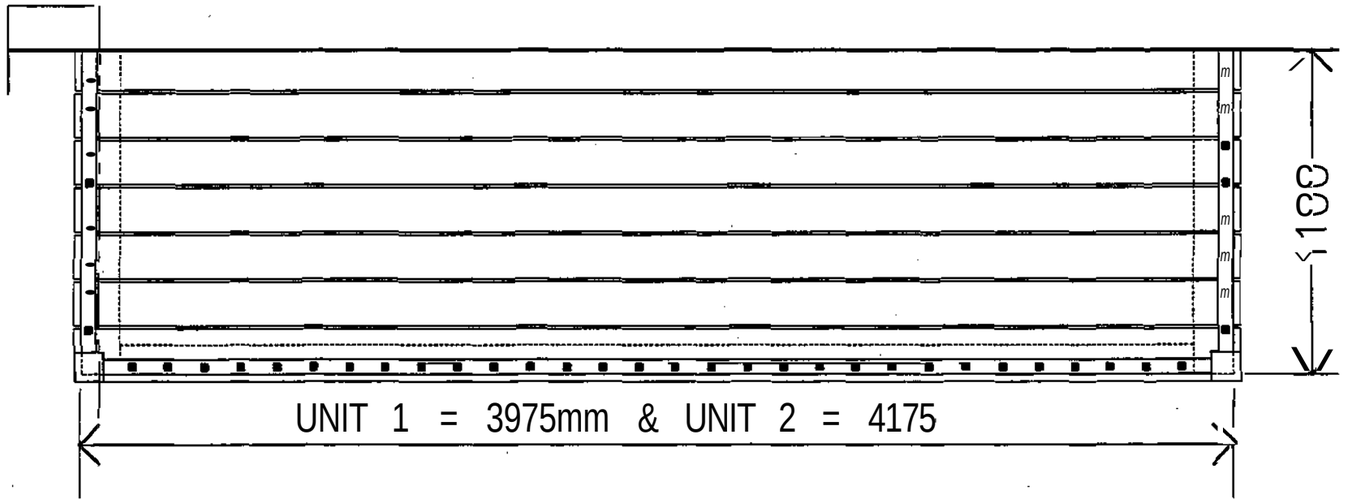

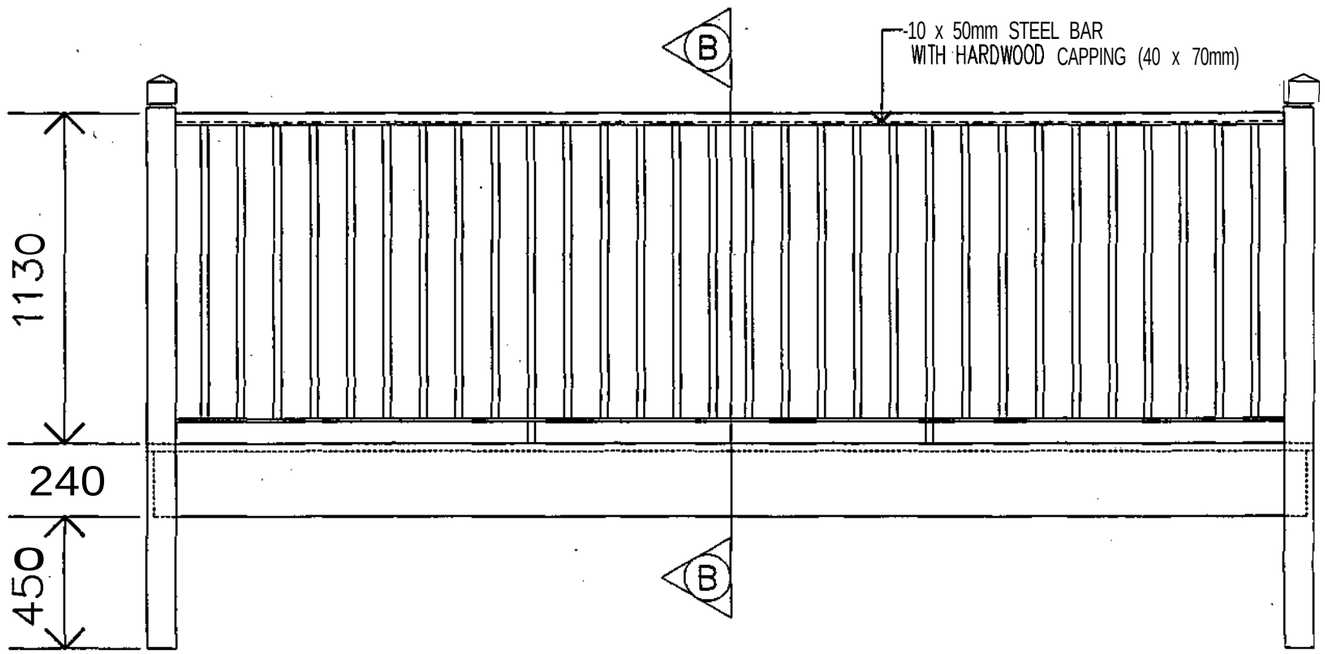

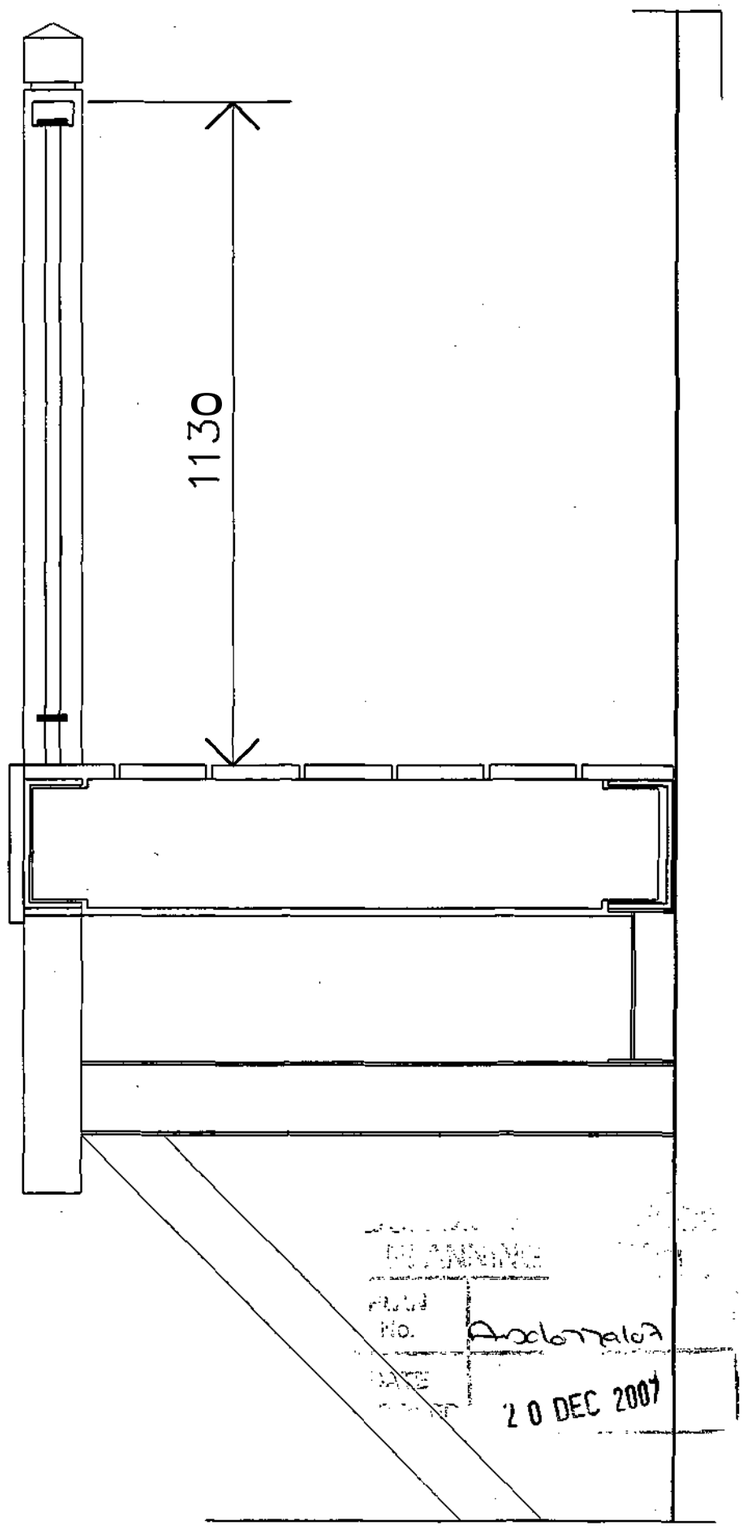

SUBJECT TO SITE SURVEY AND ALL RELEVANT STATUTORY AUTHORITY APPROVALS.

	Project: RIVERSIDE YARD - SOUTHWICK	**Drawing:** LOWER BALCONY DESIGN DETAILS UNITS 1 & 2 (SHEET 1 OF 2)	Job No: 3234A
	Scale: 1:20 & 1:10 Date: 09:04:2004 Dram: DKC		Drg.No: DS-07A
			CAD Ref: 3234A-DS-07A.dwg

22 The Spires
Off Oakfield Lane
Dartford Kent DA1 2TA
Telephone: (01322) 226445
For (01522) 226445

Derek Copeman Architect
CHARTERED ARCHITECT

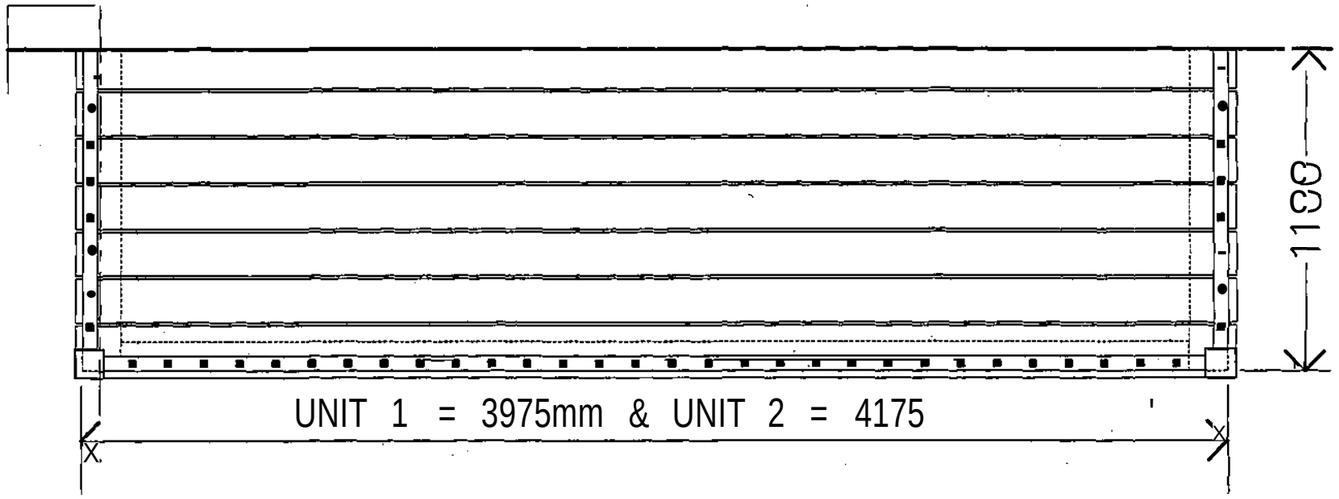

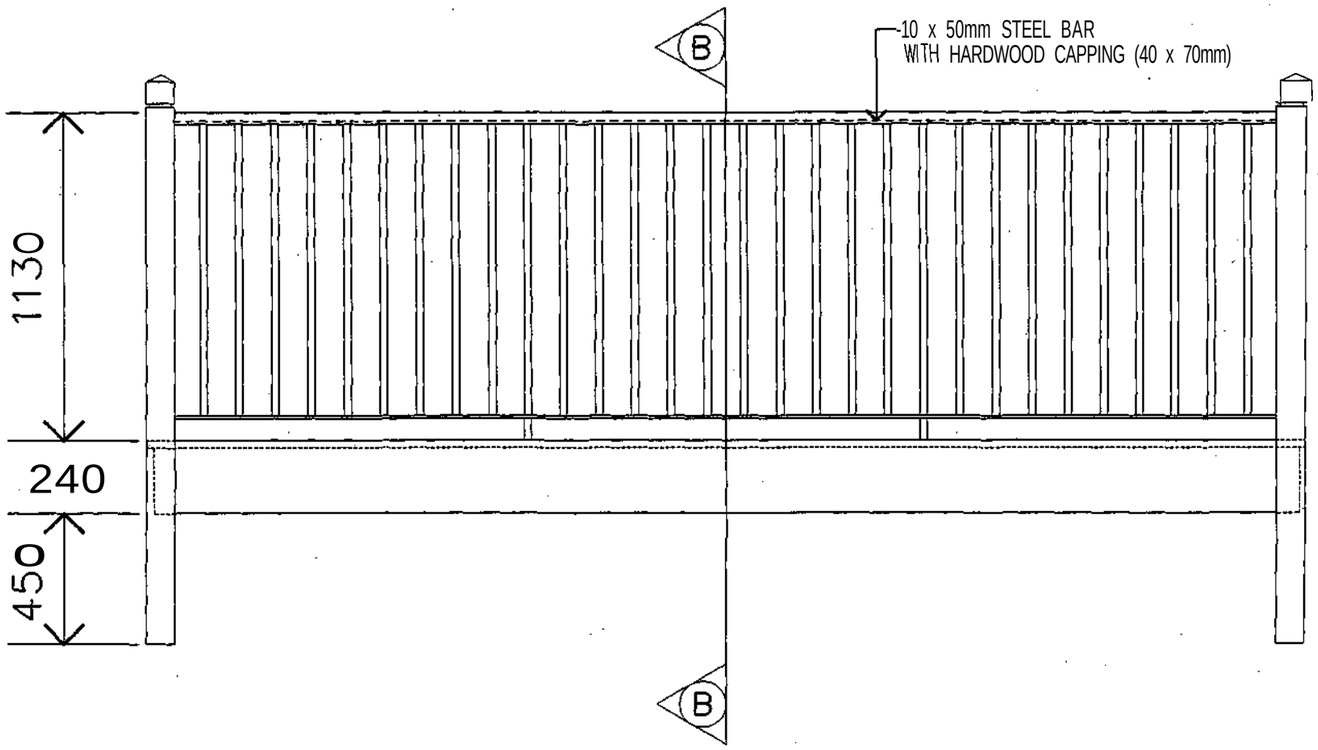

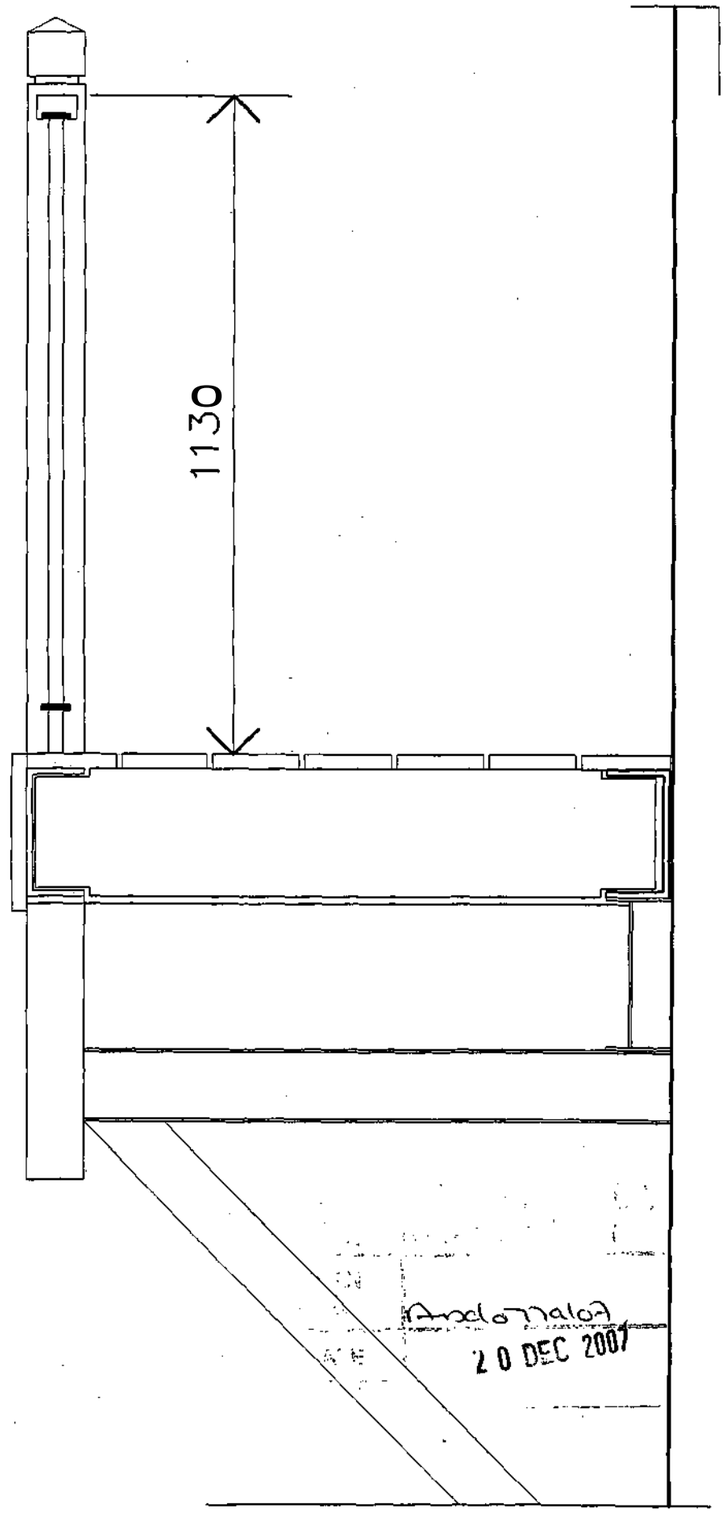

SUBJECT TO SITE SURVEY AND ALL RELEVANT STATUTORY AUTHORITY APPROVALS.

	Project: RIVERSIDE YARD - SOUTHWICK	**Drawing:** LOWER BALCONY DESIGN DETAILS UNITS 1 & 2 (SHEET 1 OF 2)	Job No: 3234A
	Scale: 1:20 & 1:10 Date: 09: 04: 2004 Drawn: DKC		Drg.No: DS-07B
			CAD Ref: 3234A-DS-07B.dwg

22 The Spires
Off Oakfield Lane
Dartford Kent DA1 2TA
Telephone: (01322) 226445
Fax: (01322) 226445

Derek Copeman Architect

CHARTERED ARCHITECT

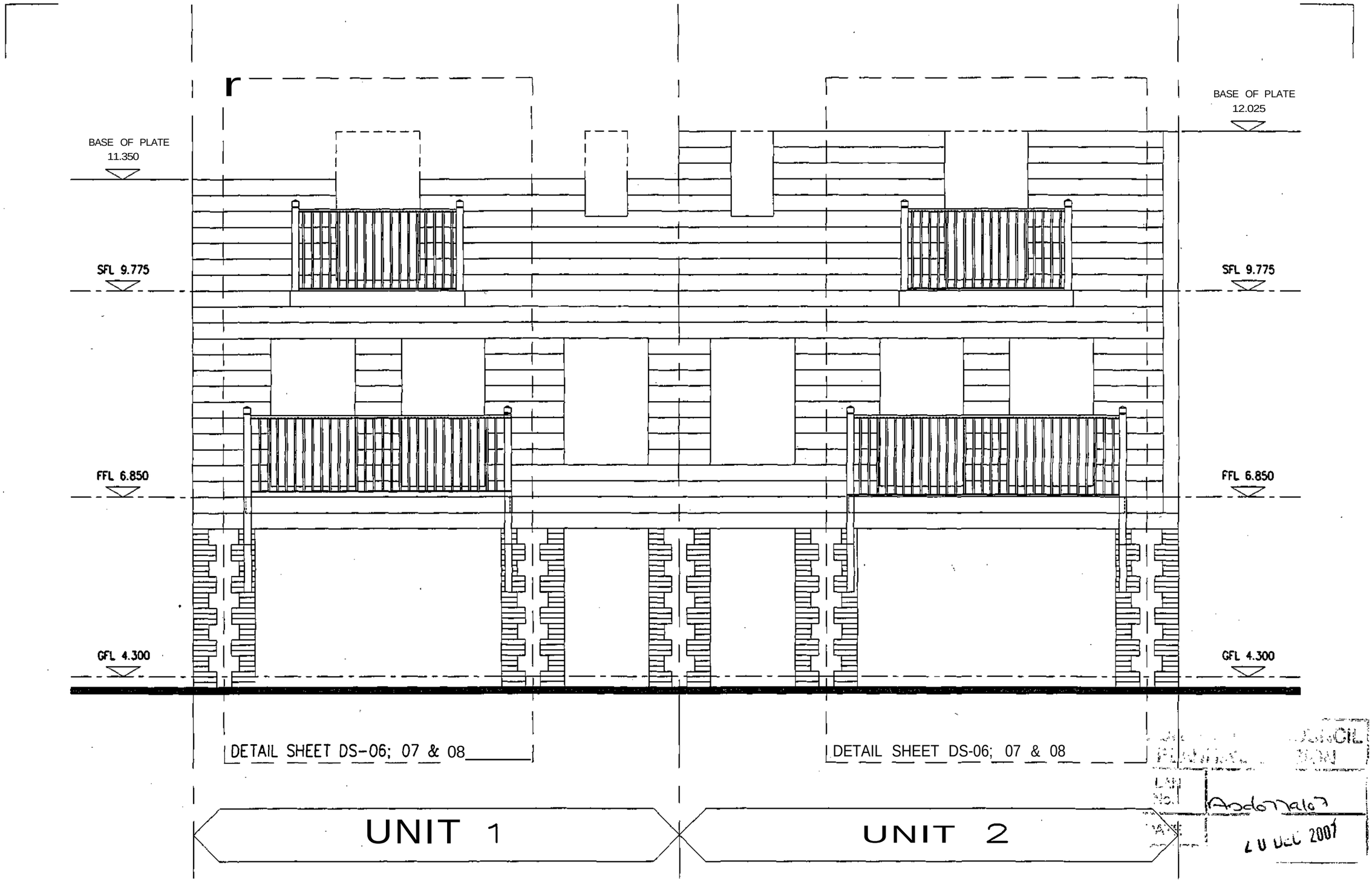

SUBJECT TO SITE SURVEY AND ALL RELEVANT STATUTORY AUTHORITY APPROVALS.

Project: RIVERSIDE YARD – SOUTHWICK	Drawing: KEY TO BALCONY DETAILS PART ELEVATION FACING CANAL	Job No: 3234A	
Scale: 1:50	Date: 09:04:2004 Drawn: DKC	Drg.No: DS-05B	
		CAD Ref: 3234A-DS-05B.dwg	

22 The Spires
Off Oakfield Lane
Dartford Kent DA1 2TA
Telephone: (01322) 226445
Fax: (01322) 226445

Derek Copeman Architect
CHARTERED ARCHITECT

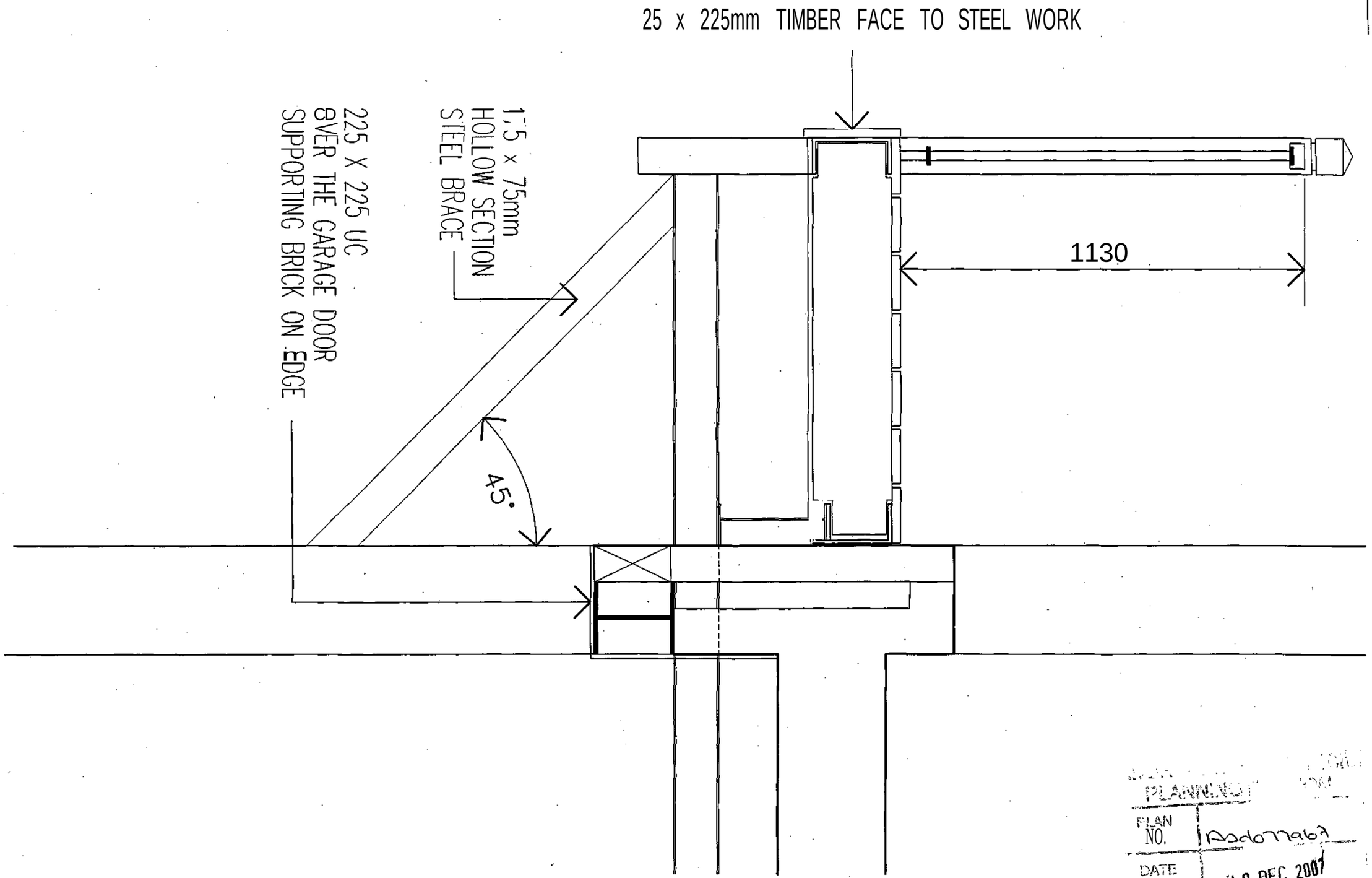

PLANNING
PLAN NO. A2d077967
DATE 20 DEC 2007

SUBJECT TO SITE SURVEY AND ALL RELEVANT STATUTORY AUTHORITY APPROVALS.

Project: RIVERSIDE YARD - SOUTHWICK		Drawing: LOWER BALCONY DESIGN DETAILS UNITS 1 & 2 (SHEET 2 OF 2)	Job No: 3234A
Scale: 1:10	Date: 09:04:2004 Drawn: DKC		Drg.No: DS-08A
			CAO Ref: 3234A-DS-08A.dwg

22 The Spires
Off Oakfield Lone
Dartford Kent DA1 2TA
Telephone: (01322) 226445
Fax: (01322) 226445

Derek Copeman Architect

CHARTERED ARCHITECT

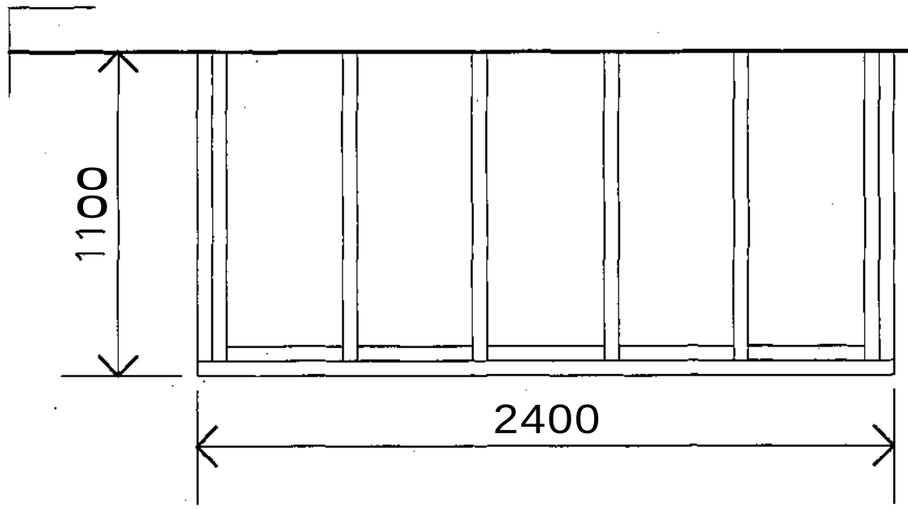

EXTRACT OF JOIST PLAN
Scale 1:20

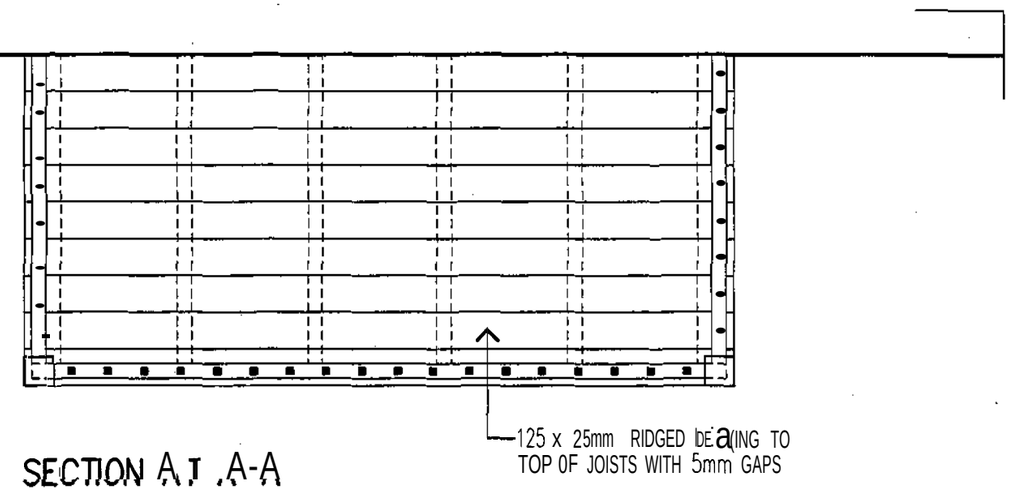

SECTION AT A-A
Scale 1:20

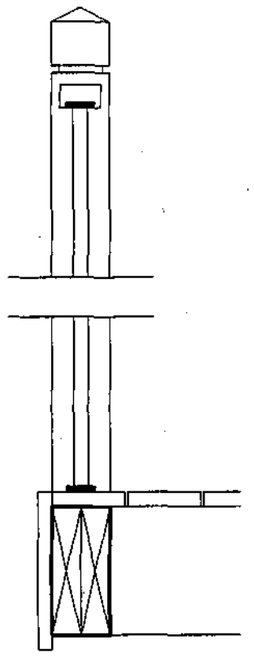

DETAIL SECTION AT B-B
Scale 1:10

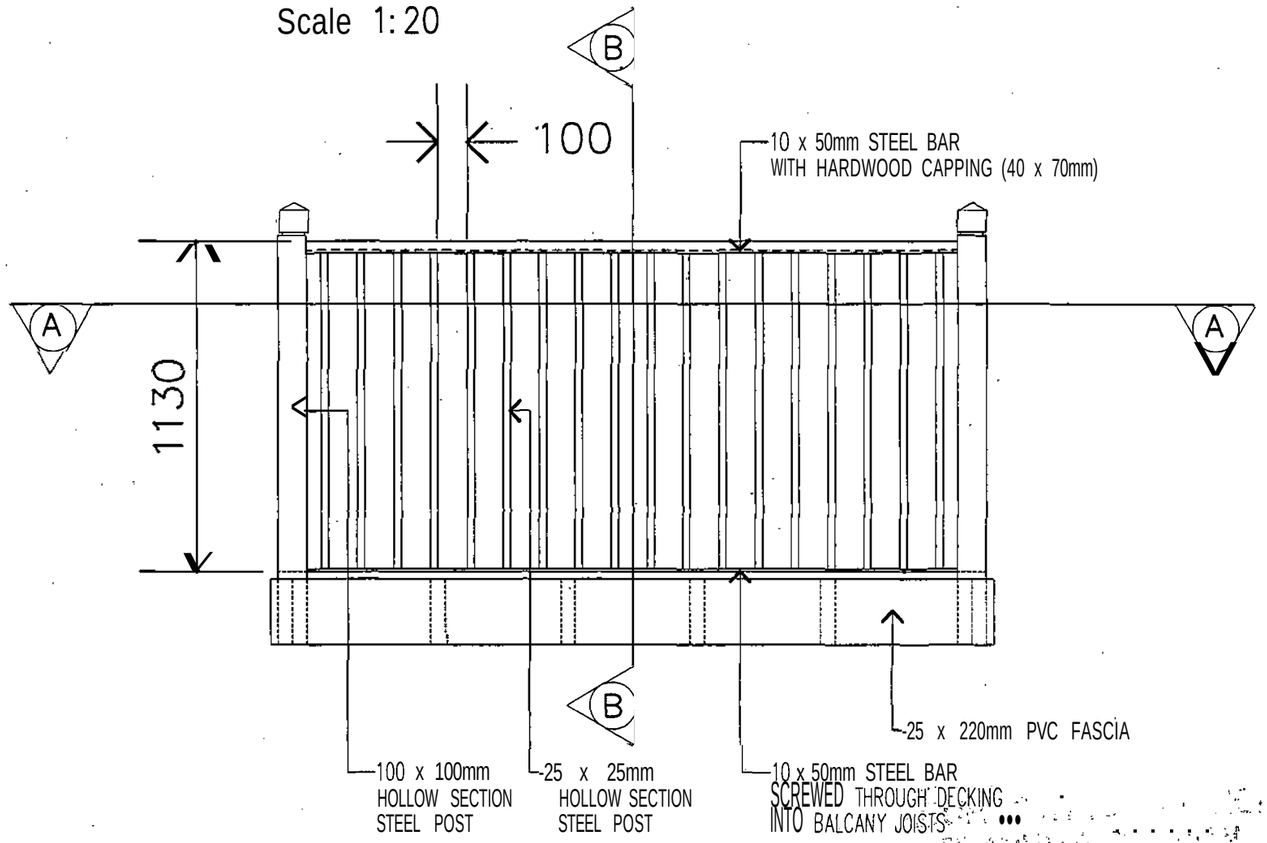

FRONT ELEVATION
Scale 1:20

PLAN No. Ando 79107
DATE 20 DEC 2007

SUBJECT TO SITE SURVEY AND ALL RELEVANT STATUTORY AUTHORITY APPROVALS.

Project: RIVERSIDE YARD - SOUTHWICK	Drawing: UPPER BALCONY DESIGN DETAILS UNITS 1 & 2	Job No: 3234A	
Scale: 1:20 & 1:10 Date: 09:04:2004 Drawn: DKC		Drg.No: DS-06A	
		CAD Ref: 3234A-DS-06A.dwg	

22 The Spires
Off Oakfield Lane
Dartford Kent DA1 2TA
Telephone: (01322) 226445
Fax: (01322) 226445

Derek Copeman Architect

CHARTERED ARCHITECT