NOTE:
1. THE SPINDLE MUST BE POSITIONED AT THE BOTTOM OF THE FALL.
2. OPENING DETAIL ON INTEGRATED VERSION IS IDENTICAL TO SOLO VISIONVENT.

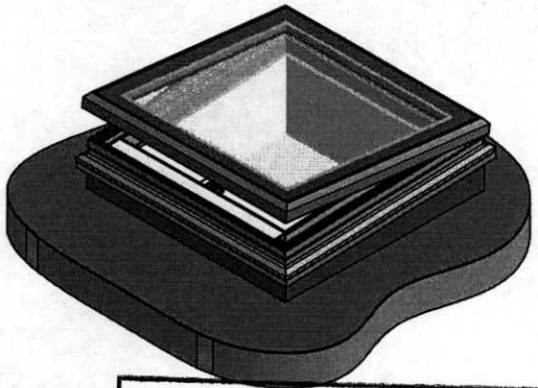

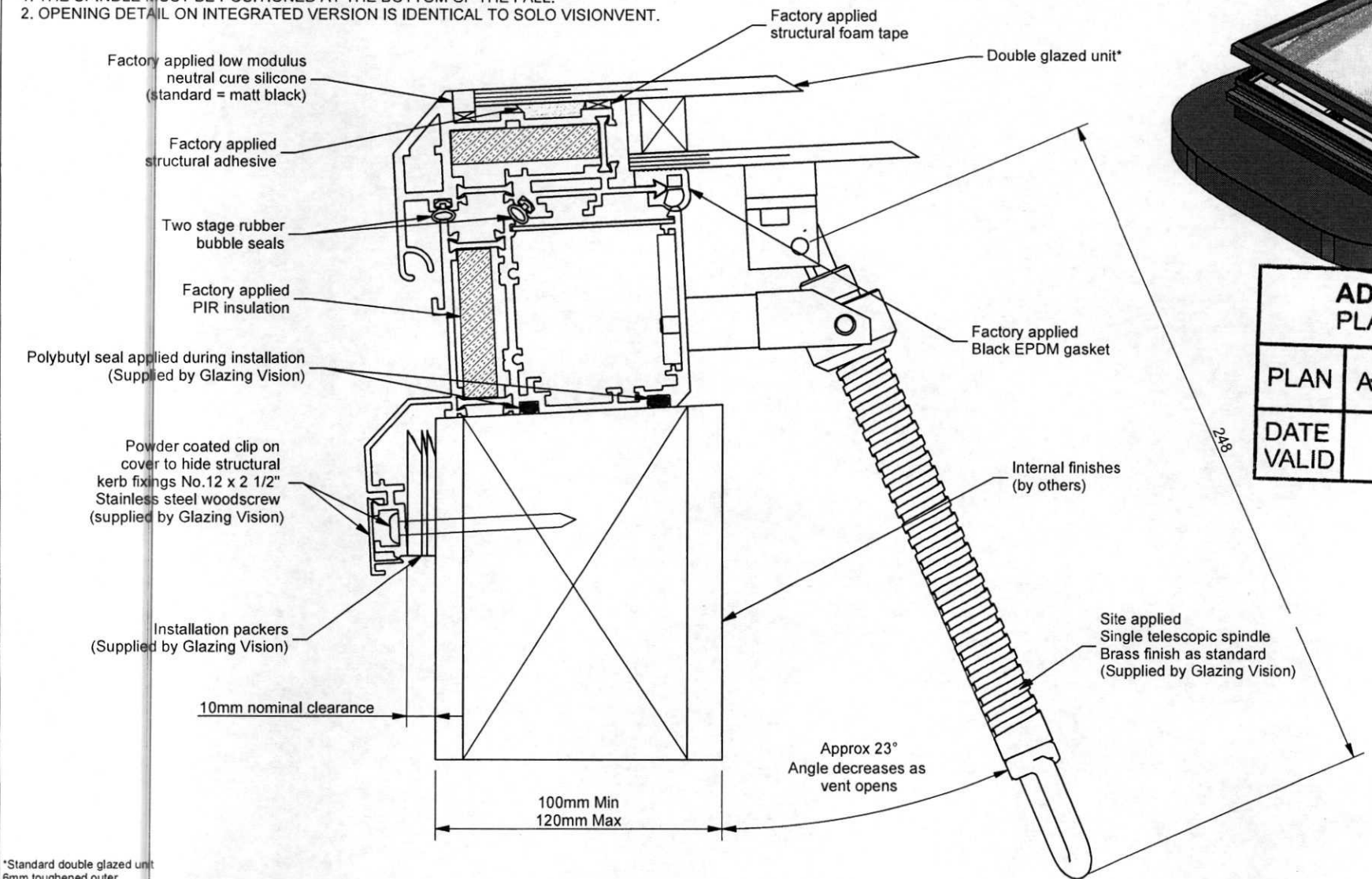

*Standard double glazed unit
6mm toughened outer
20mm Argon filled cavity black silicine sealed with warm edge spacer
6mm toughened soft coat low E inner

ADUR & WORTHING
PLANNING SERVICES

PLAN	~~AWDM~~/10/0943
DATE VALID	- 9 AUG 2013

GLAZING VISION
Saw Mills Road
Diss
Norfolk
IP22 4RG
Tel: +44 (0)333 8000 881
Fax: +44 (0)333 8000 882
Email: sales@glazing-vision.co.uk
Website www.glazing-vision.co.uk

IT IS GLAZING VISION'S POLICY TO CONTINUOUSLY DEVELOP AND IMPROVE OUR PRODUCTS, AND THEREFORE RESERVE THE RIGHT TO MODIFY OR CHANGE THE DETAIL DESIGN AT OUR DISCRETION AND WITHOUT PRIOR NOTICE.
THIS DRAWING IS COPYRIGHT AND THE SOLE PROPERTY OF GLAZING VISION LTD. THE DESIGNS/INFORMATION IT CONTAINS ARE PRIVATE AND CONFIDENTIAL. IT MUST NOT BE, COPIED, EXHIBITED OR COMMUNICATED TO THIRD PARTIES FOR ANY PURPOSE OTHER THAN THAT FOR WHICH IT WAS ISSUED WITHOUT THEIR WRITTEN PERMISSION.

Third angle projection unless otherwise noted.
Tolerances:
Whole numbers = ±1mm
One decimal place = ±0.5mm
Two decimal places = ±0.2mm
Angular = ±0.5 degree
IF IN DOUBT - ASK! DO NOT SCALE
Supplier to deburr & remove sharp corners

Rev	Revision Description	Drawn/ Date

Product: GV Standard VisionVent
Description: SOLO MANUAL VENT ONLY DETAIL
Materials: N/A
Finish: N/A
Weight: N/A
Quantity: N/A
Scale: NTS
Drawn By: RJG
Drawn Date: 27/07/2010
Drawing No: 401-ASS-120
Checked By:
Check Date: