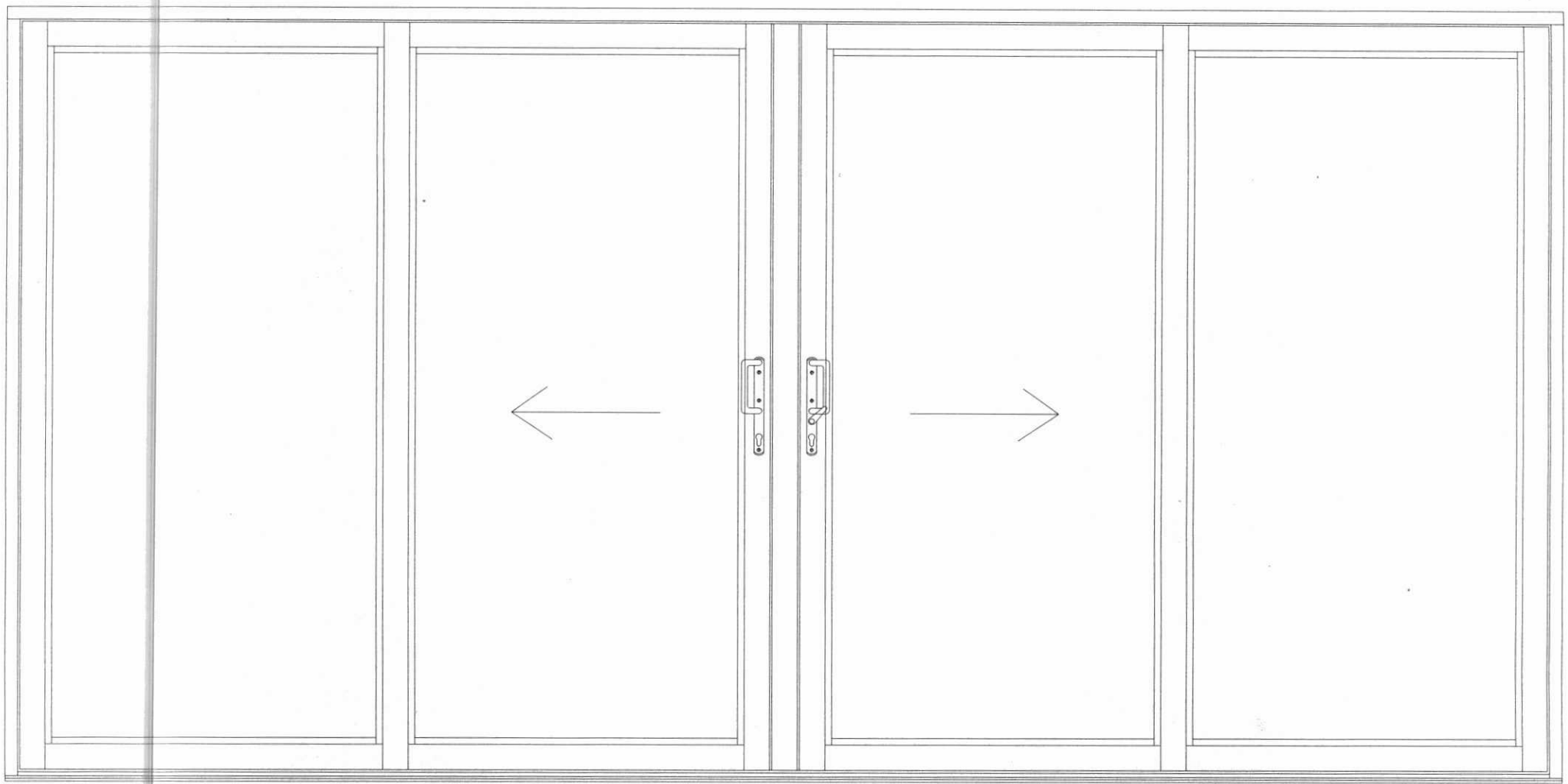

JELD-WEN
FENTON PATIO DOOR
TO SUIT OPENING 4200 X 2100
FEN42

ADUR & WORTHING
PLANNING SERVICES
PLAN WS/~~AWDM~~/10/0943
DATE VALID - 9 AUG 2013

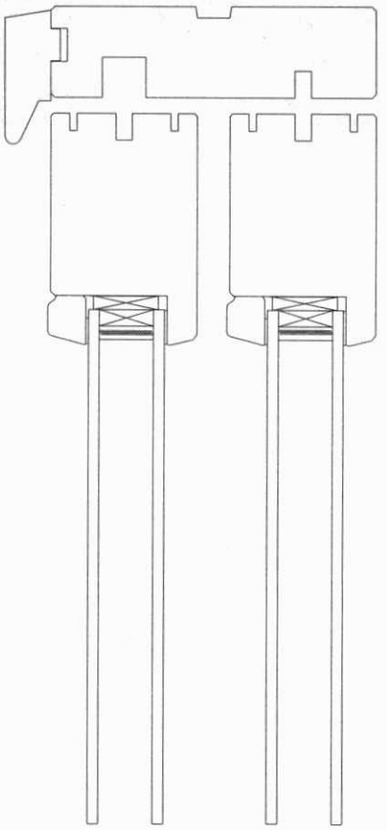

ADUR & WORTHING
PLANNING SERVICES

PLAN	~~AWDM~~/ 10/0943
DATE VALID	- 9 AUG 2013

JELD-WEN

FENTON PATIO DOOR

Head section

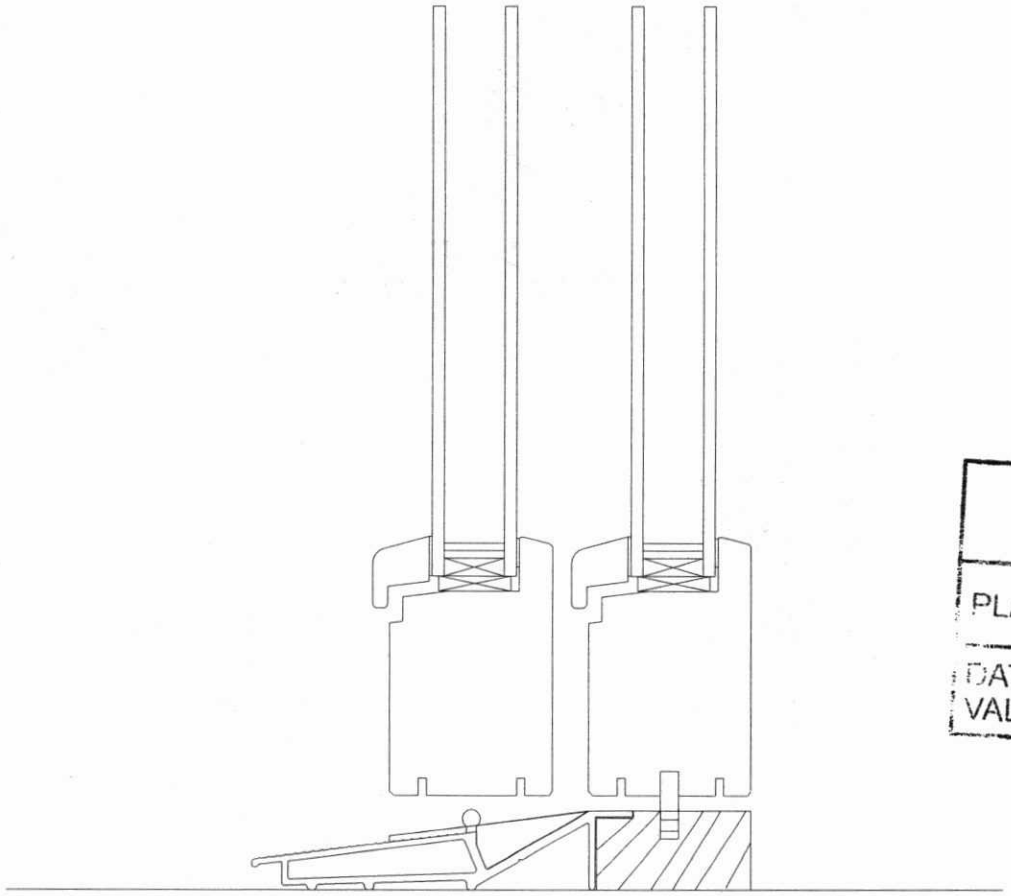

ADUR & WORTHING
PLANNING SERVICES
PLAN AWDM/10/0943
DATE VALID - 9 AUG 2013

JELD-WEN

FENTON PATIO DOOR

Sill section

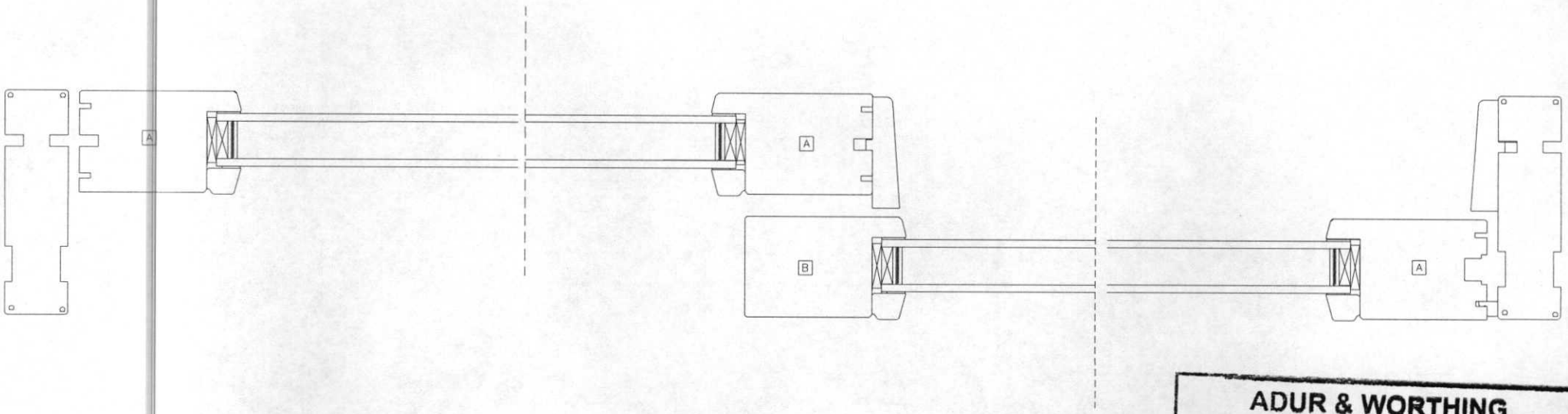

ADUR & WORTHING
PLANNING SERVICES

PLAN	~~AWDM~~ WRS/10/0943
DATE VALID	- 9 AUG 2013

JELD-WEN

FENTON PATIO DOOR

Horizontal section