NOTE

ALL WINDOW SIZES MUST BE VERIFIED ON SITE. DIMENSIONS SHOWN ARE FOR PRICING PURPOSES ONLY

HATCHING DENOTES TOUGHENED PANES IN ACCORDANCE WITH REQUIREMENTS OF BUILDING REGULATIONS PART N.

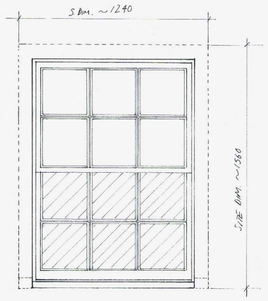

06 WB01, WS01,02,03*04
1:20 ELEVATION

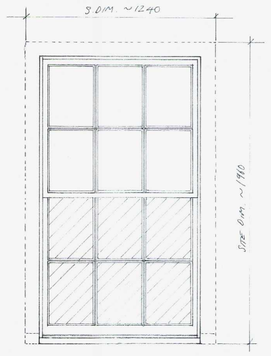

07 WG01,02, WF01,02*03
1:20 ELEVATION

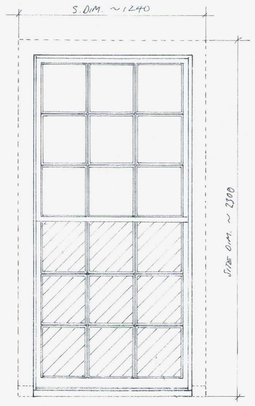

08 WG03*04
1:20 ELEVATION

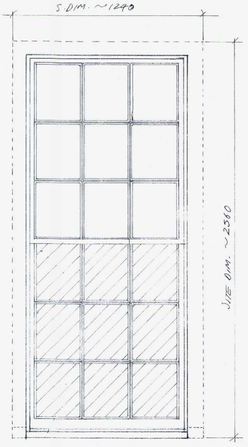

09 WF04*05
1:20 ELEVATION

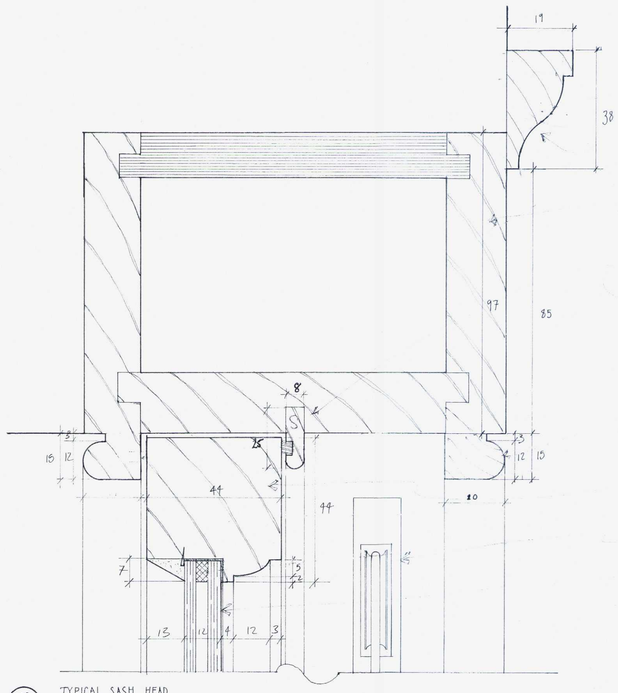

09 TYPICAL SASH HEAD
FULL SIZE

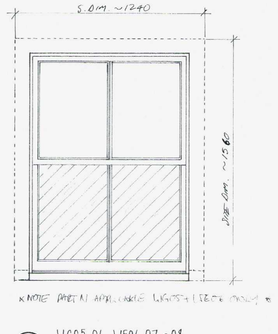

*NOTE PART M APPLICABLE WINDOWS + DOORS ONLY *

10 WG05,06, WF06,07*08
120 ELEVATION

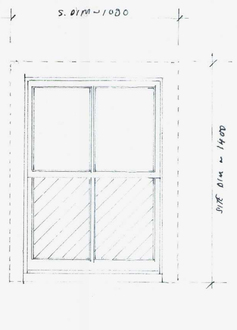

11 WB02
1:10 ELEVATION

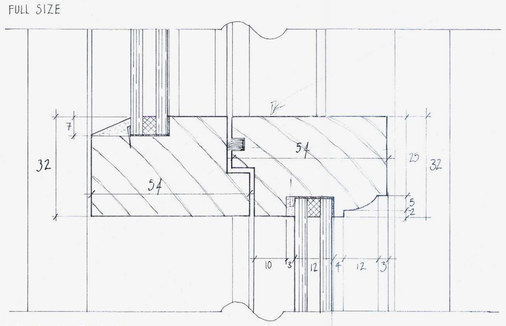

04 TYPICAL MEETING RAIL
FULL SIZE

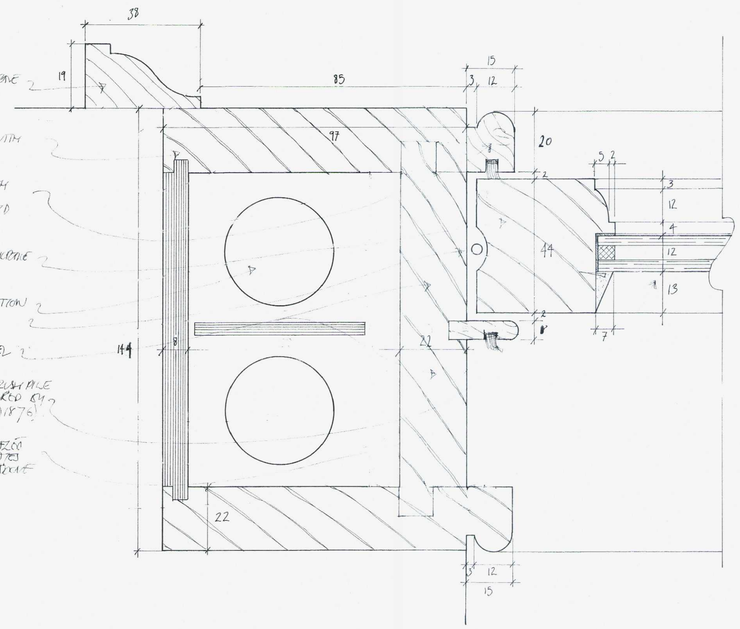

01 TYPICAL SASH JAMB
FULL SIZE

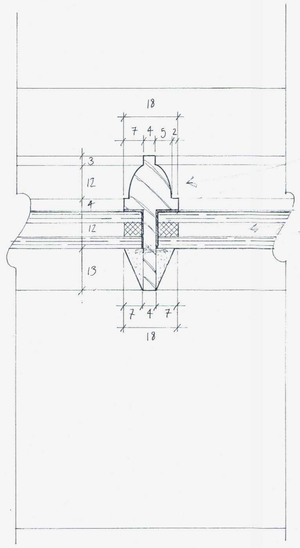

02 TYPICAL GLAZING BAR
FULL SIZE

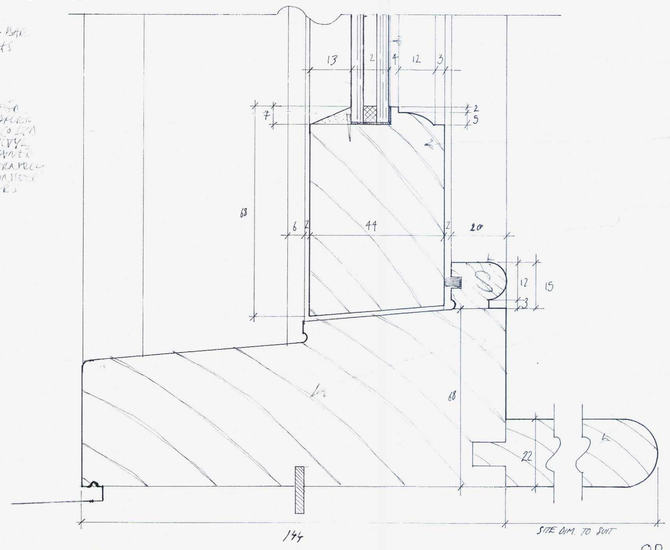

03 TYPICAL CILL
FULL SIZE

- PAINTED DOUGLAS FIR HERITAGE MASTER TRADITIONAL SASH BOX.
- HARDWOOD CASEMENT WITH WEAT JOB SERVICES.
- 20x25 MEETING BEAD FITTED WITH BRUSHPILE AS SUPPLIED BY REDDIHEAT LTD. (0905-70 1878)
- PAINTED SILL STAFF BEAD TO MATCH PROFILE OF REBATE, USE BEAD USING DIMENSIONS GIVEN AT BOTTOM OF ELEVATIONS
- PAINTED HARDWOOD SASH ALL MORTICED & TENONED, PVA GLUED & ELASTIC BANDED
- BRASS SASH PULLEY & LINEN COTTON SASH CORD 1/2 SIZE DIAGRAMATIC LAYOUT ONLY.
- 12MM 'SUNLITE' DOUBLE GLAZED UNITS BY SUNLITE DOUBLE GLAZING CO LTD (01291 551 241) SET IN BOTH BEDDING COMPOUND & RETAINED BY SPRING CLIPS (CLIPPED TOGETHER WITH EXTERNALLY ALL AS MANUFACTURERS RECOMMENDATIONS
- PAINTED HARDWOOD MEETING RAILS WITH REDDIHEAT DRAUGHT PROOFING SEAL SET INTO LOWER SASH AS PROVIDED BY REDDIHEAT LTD (01905-763 676).

12 MM SUNLITE DOUBLE GLAZING FITTED AS NOTED ABOVE WITH TOUGHENED GLASS TO PARTS AS COMPLIANT WITH TOUGHENED GLASS AS SPECIFIED IN PART N.

PAINTED HARDWOOD MASTIC RAIL MORTICED & TENONED INTO STILES

PAINTED SHAPED STAFF BEAD WITH BRUSH PILE WEATHERPROOFING SEAL AS SUPPLIED BY REDDIHEAT LTD (01905-763676) & FIXED SIMILARLY TO EXISTING - MITRED & GLUED

PAINTED HARDWOOD CILL WITH GALVANISED METAL CAP, EPOXY MASTIC TO BE USED TO WEDGE INSTALLED TO ALLOW DRY SPACE TO UNDERSIDE.

PAINTED DOUGLAS FIR LAMINATED BOARD WITH MITRED EDGE REBATED TO END TO SUIT SASH (SEE DETAIL 1/4 & 1/4)

ADUR & WORTHING PLANNING SERVICES

PLAN	AWDM/1/0142
DATE VALID	- 2 AUG 2013

FOR PRICING.

83 MARINE PARADE & 1 WEST BUILDINGS

WORTHING WEST SUSSEX BN11 3QL

TYPICAL SASH WINDOW DETAILS

1:20+FS.@A1 JUNE 2013 MRP-P2/A.01

MALCOLM SIMMONDS ARCHITECTS