THE CONTRACTOR SHOULD VERIFY ALL DIMENSIONS BY SITE MEASUREMENT PRIOR TO ORDERING MATERIALS OR MANUFACTURING COMPONENTS

THIS DRAWING TO BE READ IN CONJUNCTION WITH ALL OTHER ARCHITECTS + CONSULTANTS INFORMATION.

REPORT ANY DISCREPANCIES TO THE ARCHITECT IMMEDIATELY

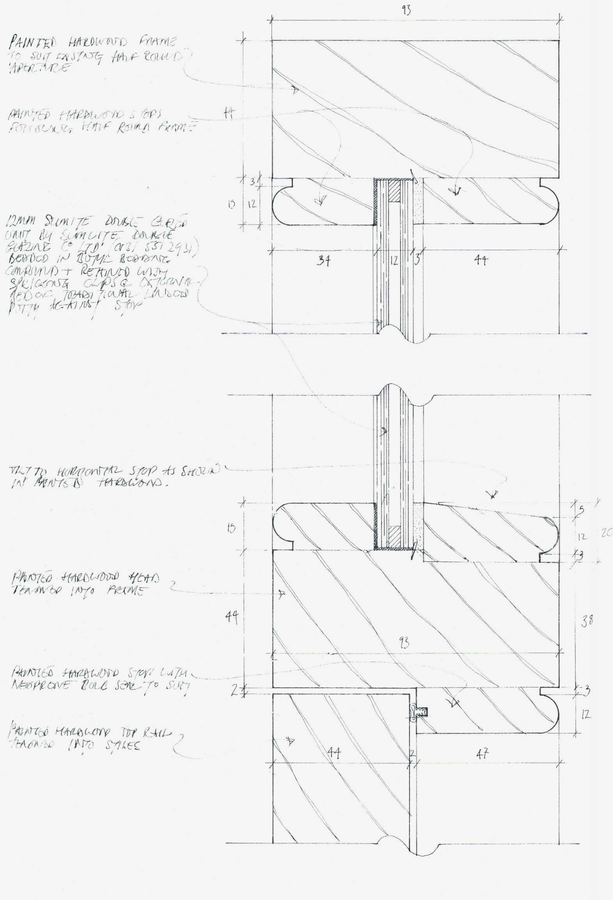

02 FRONT DOOR WITH FANLIGHT RAIL DETAIL
FULL SIZE

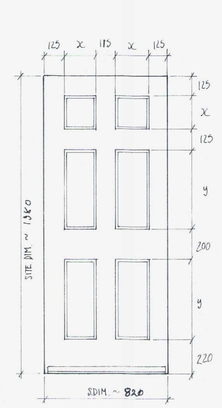

05 83 MARINE PARADE: FRONT DOOR
1:20 - DGO

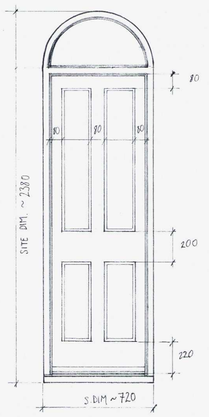

06 1 WEST BUILDINGS: FRONT DOOR
1:20 - DGO

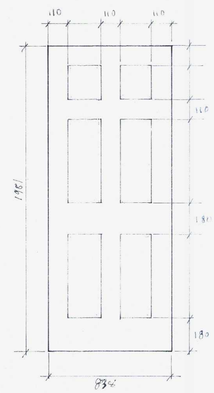

07 MARINE PARADE: INTERNAL DOORS
HOWDENS 'BURFORD' [illegible]

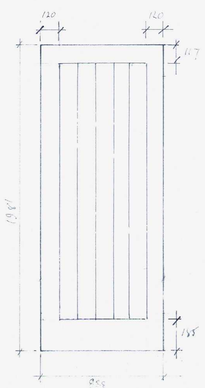

08 WEST BUILDINGS: INTERNAL DOORS
HOWDENS 'BURFORD' [illegible]

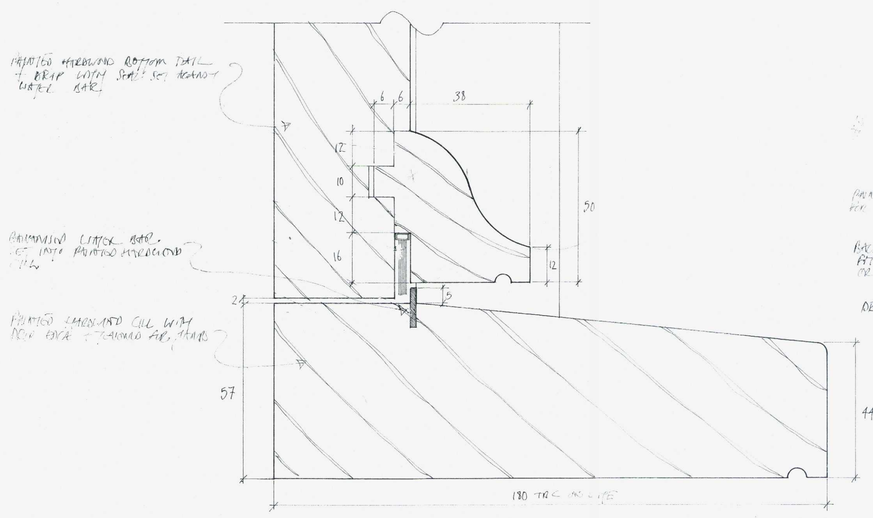

01 FRONT DOORS CILL DETAIL
FULL SIZE

NOTE: FRONT DOOR TO 83 MARINE PARADE TO SUIT EXISTING RETAINED FRAME & FANLIGHT & DETAIL TBC ON SITE

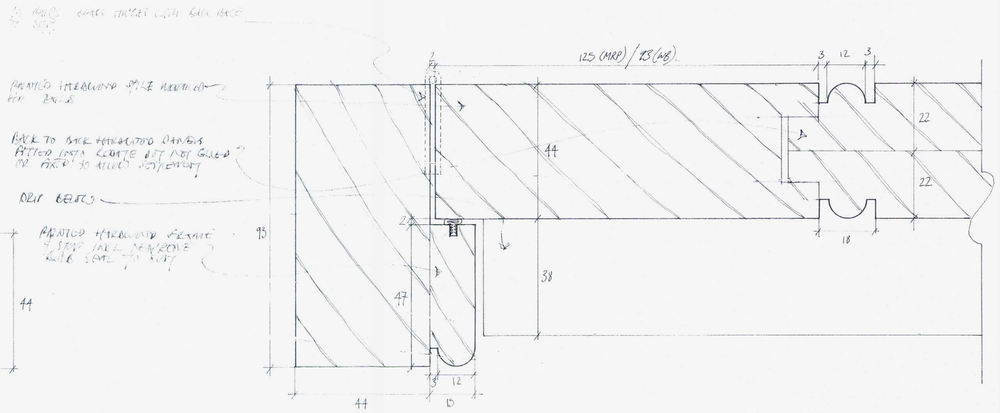

03 FRONT DOOR JAMB, HEAD + STILE: TYPICAL DETAIL

ADUR & WORTHING PLANNING SERVICES	
PLAN	~~AWDM~~ WB/13/0542
DATE VALID	- 2 AUG 2013

FOR PRICING

83 MARINE PARADE & 1 WEST BUILDINGS

WORTHING WEST SUSSEX BN11 3QL

FRONT & INTERNAL DOOR DETAILS

1:20 & FULL SIZE @ A1 JUNE 2013 MRP-P2/A02

MALCOLM SIMMONDS ARCHITECTS