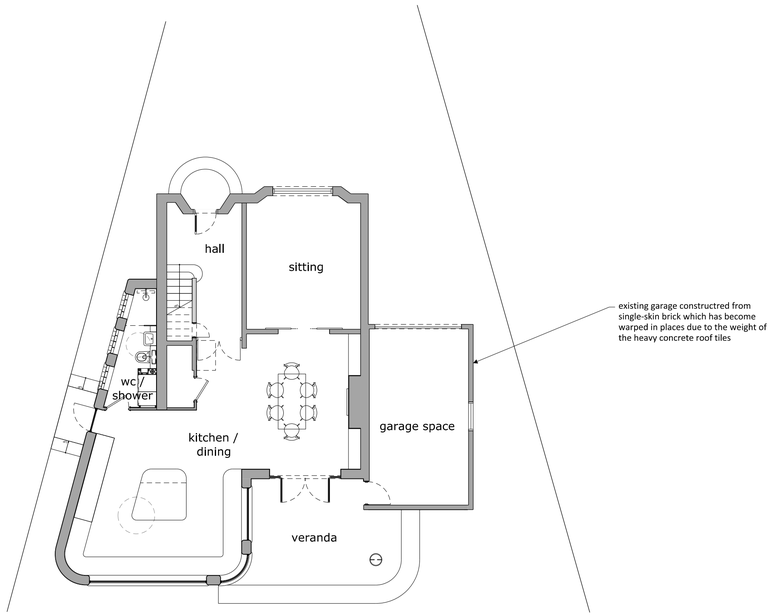

Existing Ground Floor Plan
1:100 @ A1

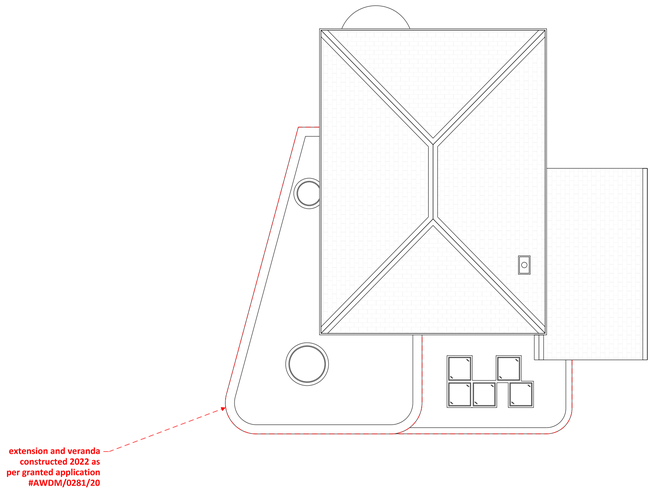

Existing Roof Plan
1:100 @ A1



Existing East Elevation
1:100 @ A1



Existing West Elevation
1:100 @ A1

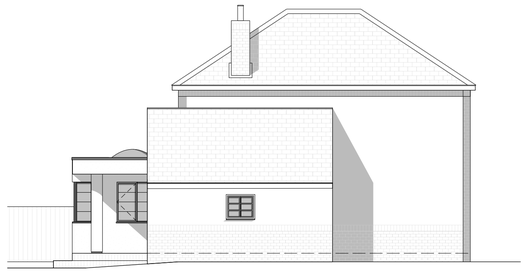

Existing North Elevation
1:100 @ A1



Existing South Elevation
1:100 @ A1

Contractor to check and verify all dimensions on site prior to commencing work. Any discrepancies to be reported to the architect immediately.

A1

KEY

Revisions

Rev	Date	Note

Project address
14 Sea Close
WORTHING
BN12 4BQ

Client
Martyn Smith + Vivien Knibbs

Project title
14 Sea Close

Drawing Title
Existing Drawings

Scale	Drawn by
1:100 @ A1	WF

Project No.	Drawing no.	Revision
158	001	P2

Status	First Drawn
Planning	06.02.23

FAB ARCHITECTS
fabarchitectsuk.com | mail@fabarchitectsuk.com
copyright © FAB ARCHITECTS LLP.