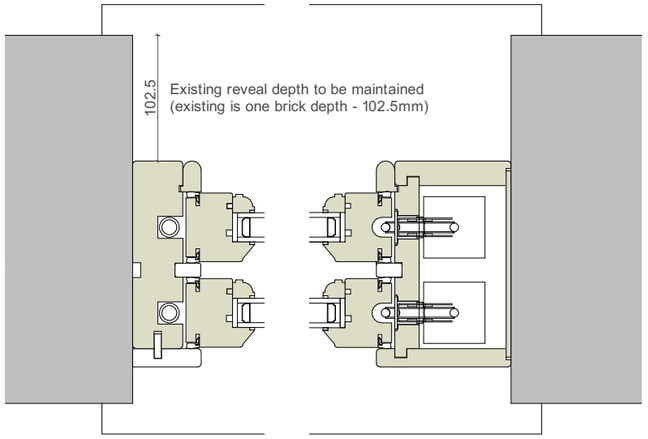

Timber Sash Window Reveal Detail

Existing & Proposed
Scale 1:5 @ A3

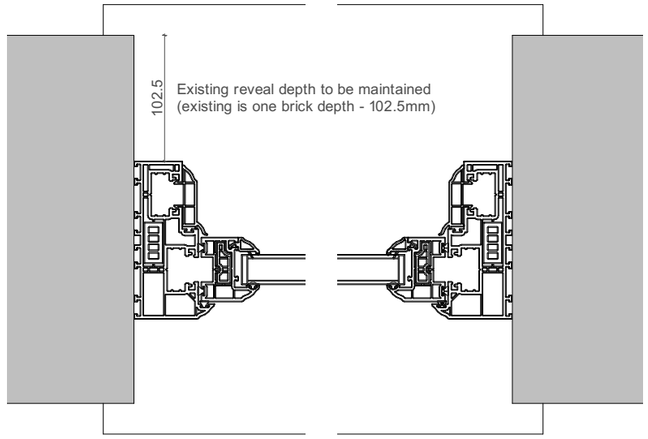

uPVC Sash Window Reveal Detail

Proposed
Scale 1:5 @ A3

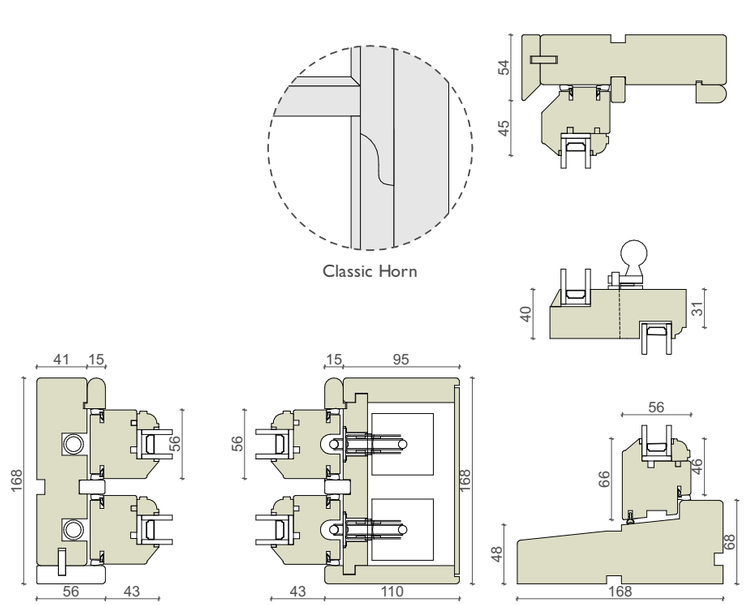

Timber Sash Window Details

Existing & Proposed
Scale 1:5 @ A3

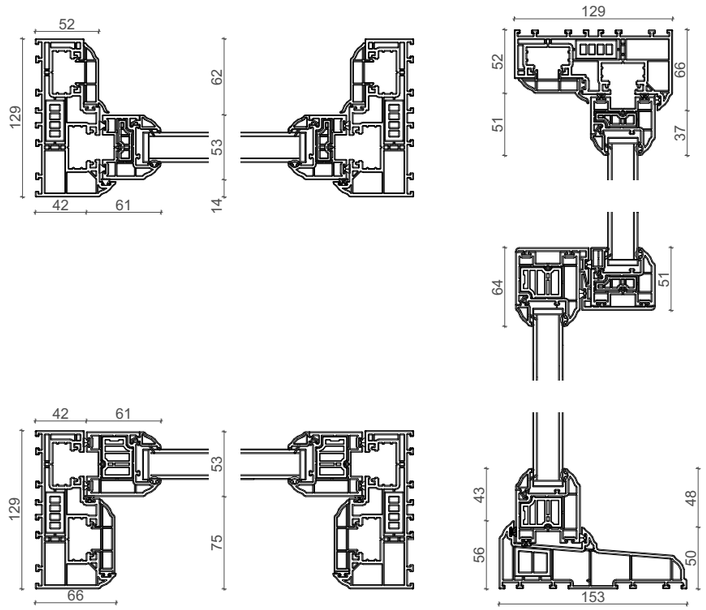

uPVC Sash Window Details

Proposed
Scale 1:5 @ A3

PMR ARCHITECTURE

Sheridan House
112 - 116 Western Road
Hove, BN3 1DD

01273 980820
brighton@pmr-architecture.co.uk
www.pmr-architecture.co.uk

Client:	Callaways Ltd.
Project:	109 Heene Road, Worthing, BN11 4PH
Drawing Title:	Existing and Proposed Details
Drawing No:	26.61_PL_103
Revision:	A
Date:	November 2026
Status:	PLANNING
Scale:	1:5 @ A3

0 50 100 150 200 250