Information on the 6 metre high piece of equipment.

Clive Bramble

From: Jacqui Herbert [jherbert@wicksteed.co.uk]
Sent: 23 October 2009 10:55
To: Clive Bramble
Cc: Chris Thompson
Subject: FW: Emailing: NET - BUCC.pdf
Attachments: NET - BUCC.pdf

<<...>>

Good Morning

Thank you for enquiry regarding the Buccaneer Tower sent via Chris Thompson our Area Sales Manager.

Please find attached Technical Specification Sheet as requested.

Please do not hesitate to contact either myself or Chris for any further assistance.

Kind Regards

PLAN NO. ADC0422/09
DATE RECEIVED 29 OCT 2009

ADUR D.C.
CHIEF EXECUTIVE'S
DEPARTMENT
26 OCT 2009

Jacqui Herbert

Customer Adviser
Wicksteed Playscapes
Digby Street, Kettering, Northants, NN16 8YJ

E-mail: jherbert@wicksteed.co.uk
Website: www.wicksteed.co.uk
Tel: +44 (0)1536 517028
Fax: +44 (0)1536 410633

Save Paper - Do you really need to print this e-mail?

Registered in England No. 603152
Registered Office Address: Wicksteed Leisure Ltd. Digby Street, Kettering, Northamptonshire, NN16 8YJ

This e-mail is confidential and intended solely for the use of the individual to whom it is addressed. Any views or opinions expressed are solely those of the author and do not necessarily represent those of Wicksteed Leisure Limited.

If you are not the intended recipient of this e-mail please delete it from your system immediately. Any use, dissemination, forwarding, printing or copying of this e-mail other than by the intended recipient is strictly prohibited.

Important Information and Disclaimer.

Please do not print this e-mail unless necessary.

The domain from which this e-mail is sent is not indicative of the Council on whose behalf it is sent. The author will indicate in the body of the e-mail on whose behalf it is sent.

The information contained in this email may be subject to public disclosure under the Freedom of Information Act 2000. Unless the information contained in this email is legally exempt from disclosure, we cannot guarantee that we will not provide the whole or part of this email to a third party making a request for information about the subject matter of this email.

This e-mail is intended exclusively for the addressee and may contain information that is confidential and/or privileged. If you are not the intended recipient please note that any form of distribution, copying or use of this communication or the information in it is strictly prohibited and may be unlawful. If you have received this communication in error please return it to the sender and delete the material from any computer and destroy any printed copy.

Adur District Council and Worthing Borough Council cannot guarantee that this message or any attachment is virus-free or has not been intercepted or changed. The views of the author may not necessarily reflect those of either Adur District Council or Worthing Borough Council. Any opinions or other information in this message that do not relate to the official business of Adur District Council and / or Worthing Borough Council are neither given nor endorsed by them.

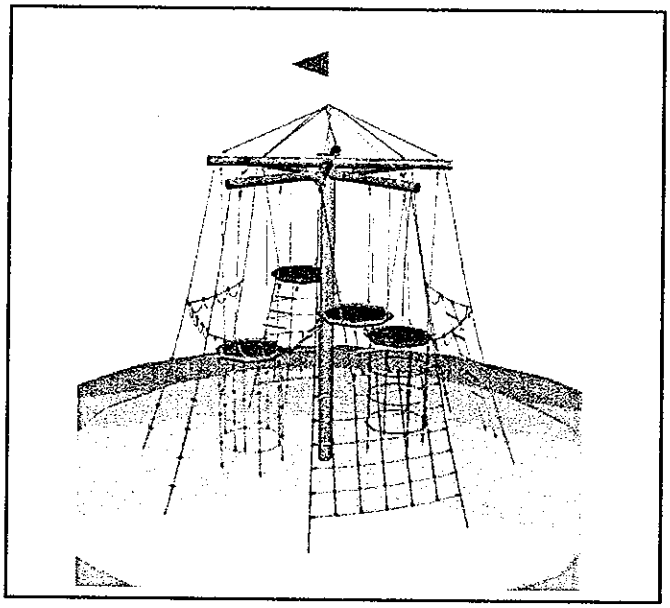

Netscapes

Buccaneers Towers

PROD. CODE	NET - BUCC
SIZE	5.5m x 5.7m
AGE RANGE	6 years and over
F/ FALL HEIGHT	2800mm
HEAVIEST PART	
TOTAL WEIGHT	

WICKSTEED playscapes

SPECIFICATION

Centre Upright: Made from Stainless Steel 6.2m x 193.7mm Dia
Outer Tube:
Net:
Fixings: Anti-vandal and stainless steel/plated for weather protection
Rope Fixings:
Weld:
Finish:

INSTALLATION INSTRUCTIONS

Note

Note ENSURE ALL INSTALLATION AIDS ARE REMOVED BEFORE FIRST USE

Surfacing Details

60.5 SQ Metres Of Wetpour Surfacing
45.5 SQ Metres Of 120mm Wetpour Surfacing
15.0 SQ Metres Of 70mm Wetpour Surfacing
27 Metres Of Linear Wetpour Edging

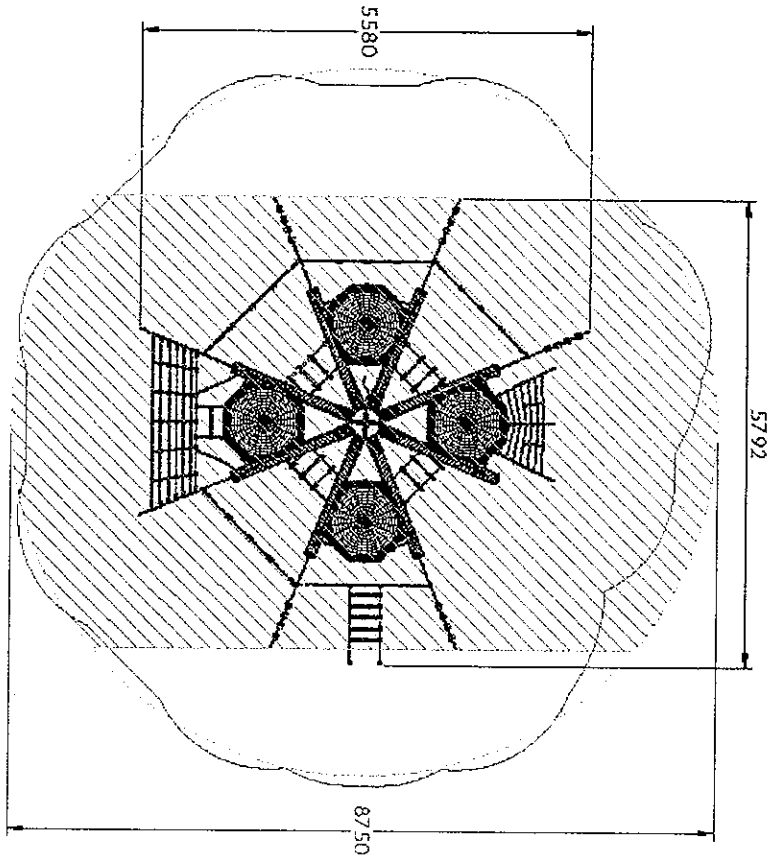

Bark Fix Details

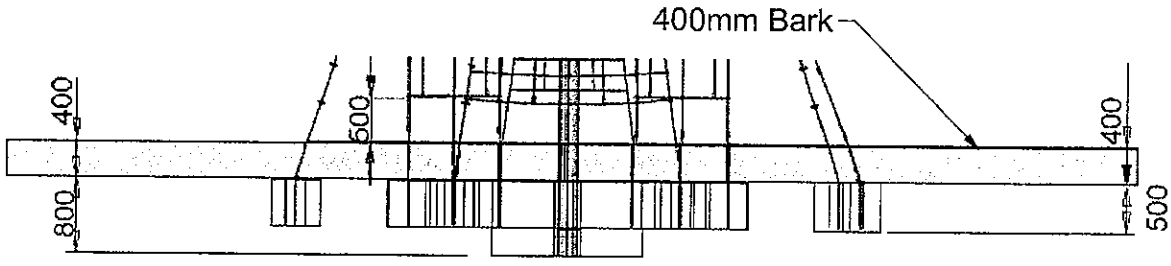

WICKSTEED playscapes

Foundation Details

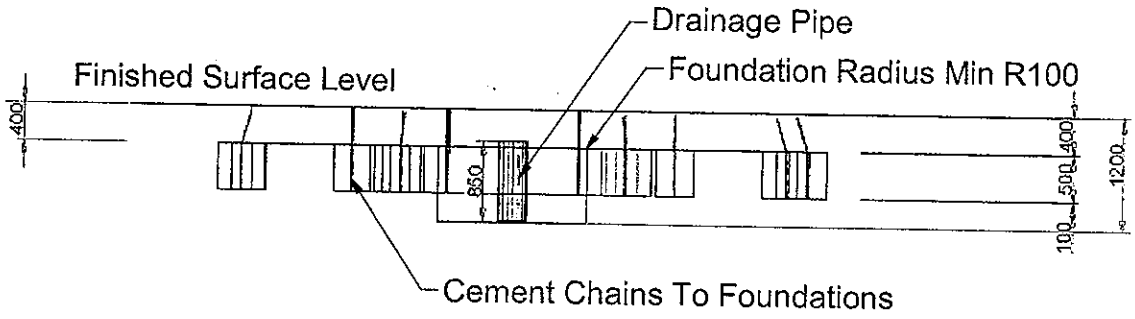

N.B

The Red Digits 1-7 Must Match The Digits For The Wooden Posts

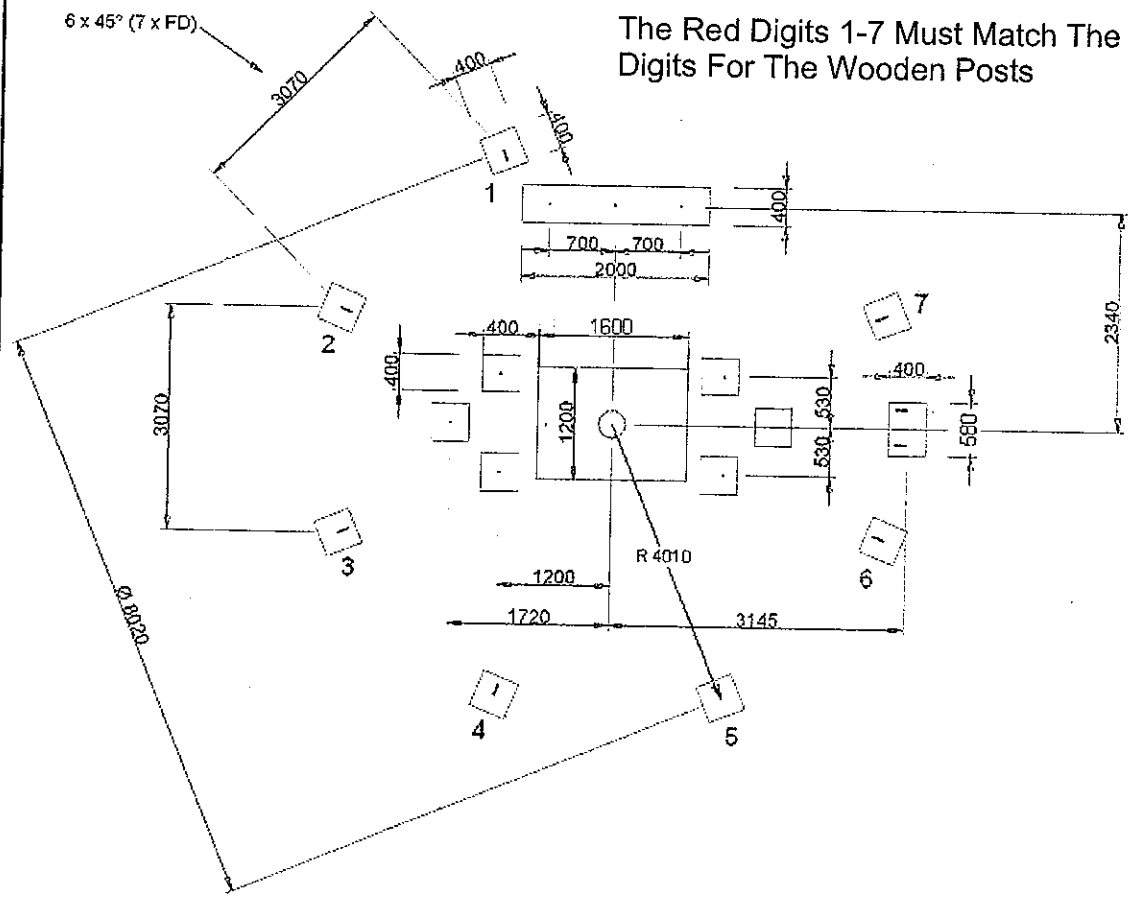

WICKSTEED playscapes

Side Elevation & Concrete Details

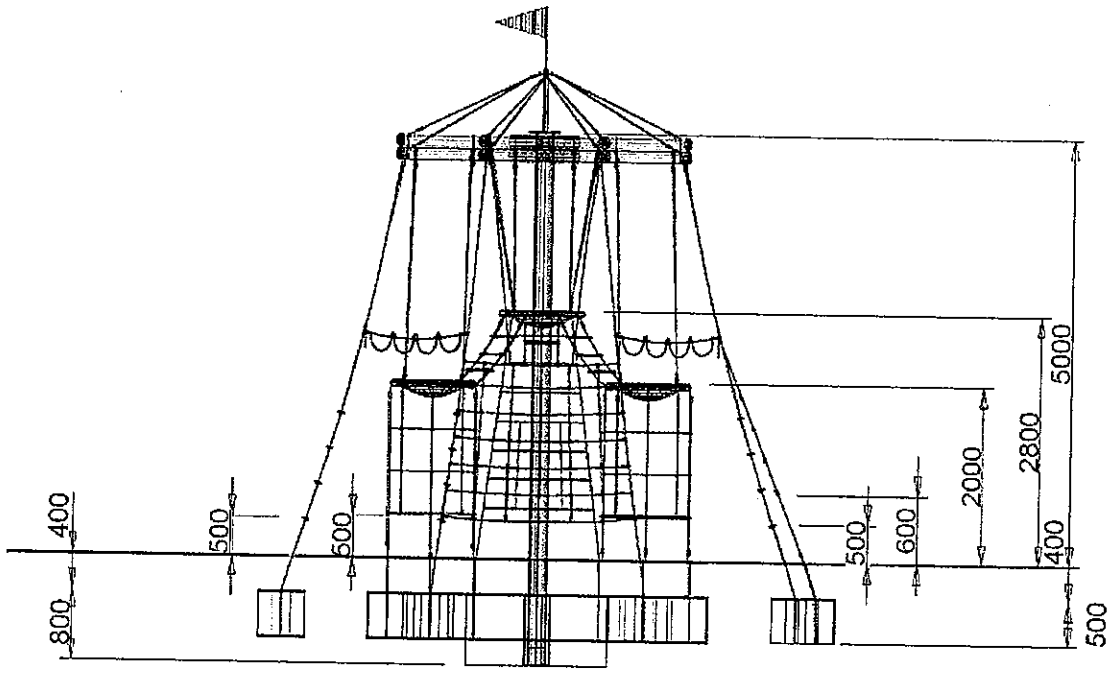

Foundation Surfaces Are On One Level

Chains Should Be Shortened During Install If Necessary

Type 7 Chains For Foundations

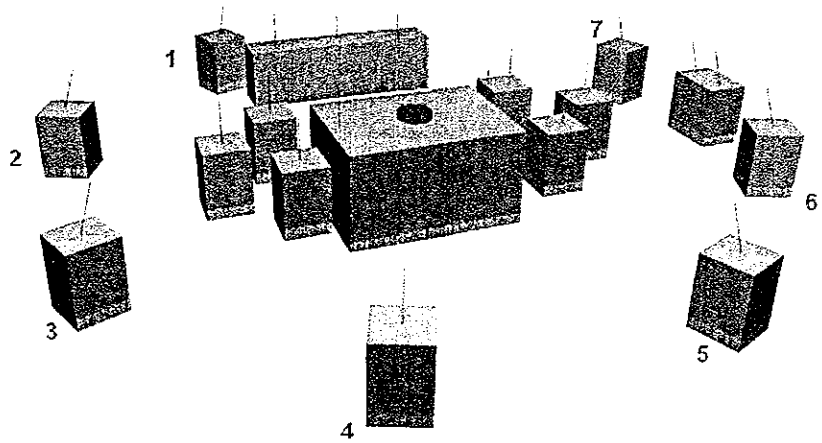

WICKSTEED playscapes

Steel Post To Drainage Pipe Detail

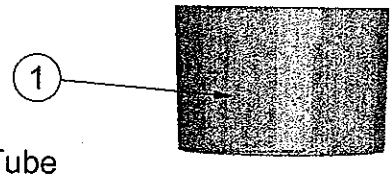

Insert Mast Into Drainage Tube

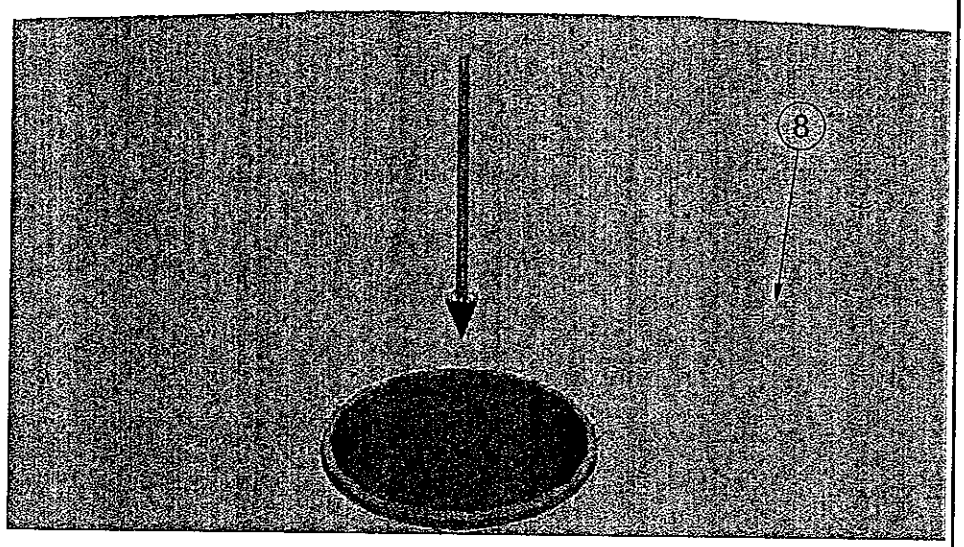

Fill In Around Central Mast With Concrete

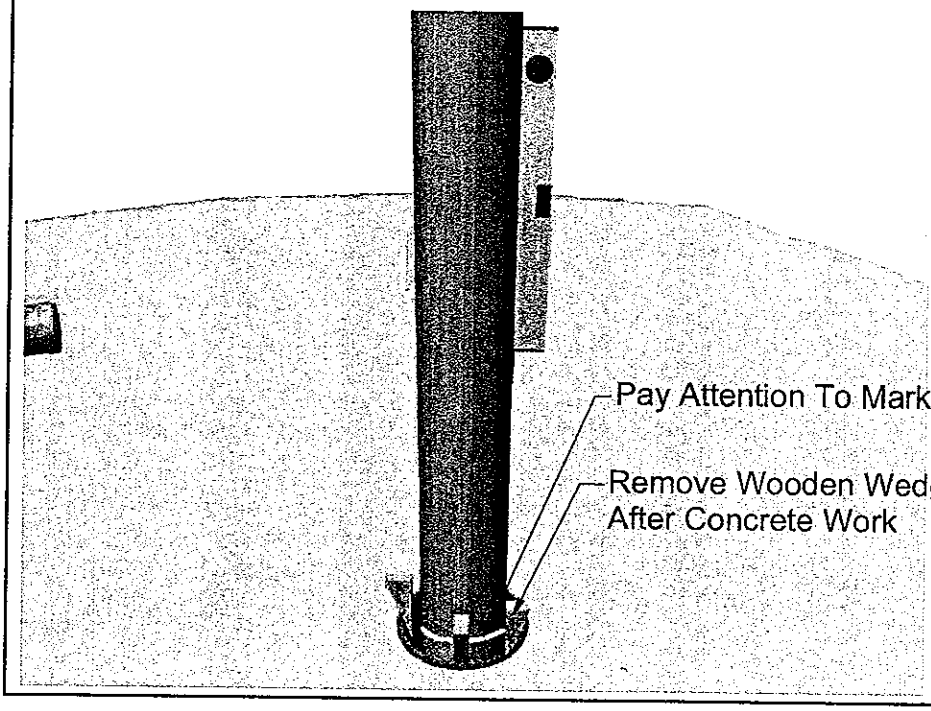

WICKSTEED playscapes

Wooden Poles To Mast Cap Detail

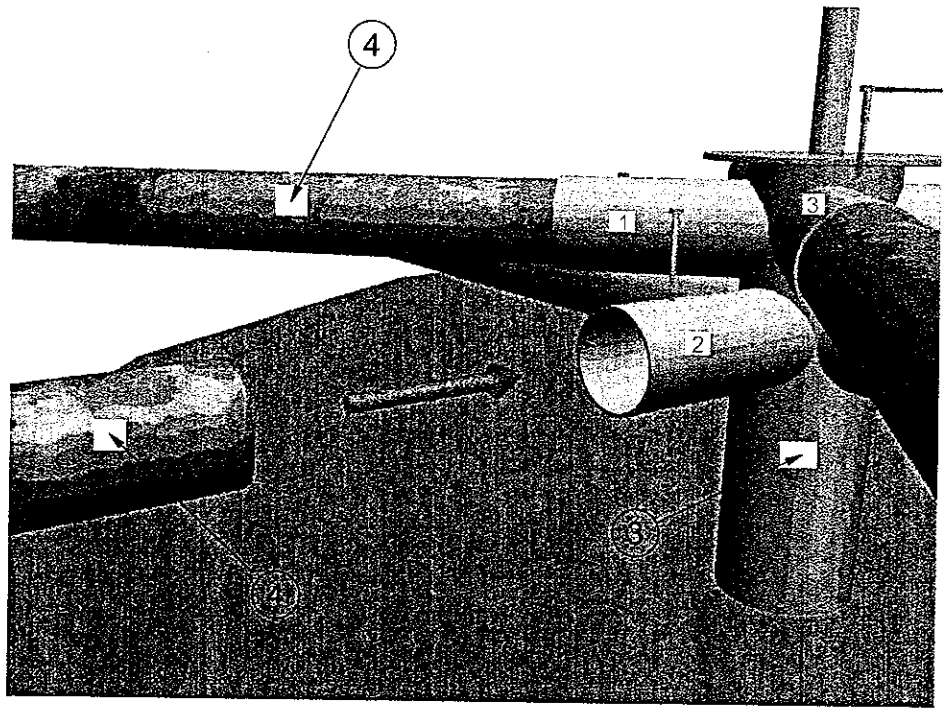

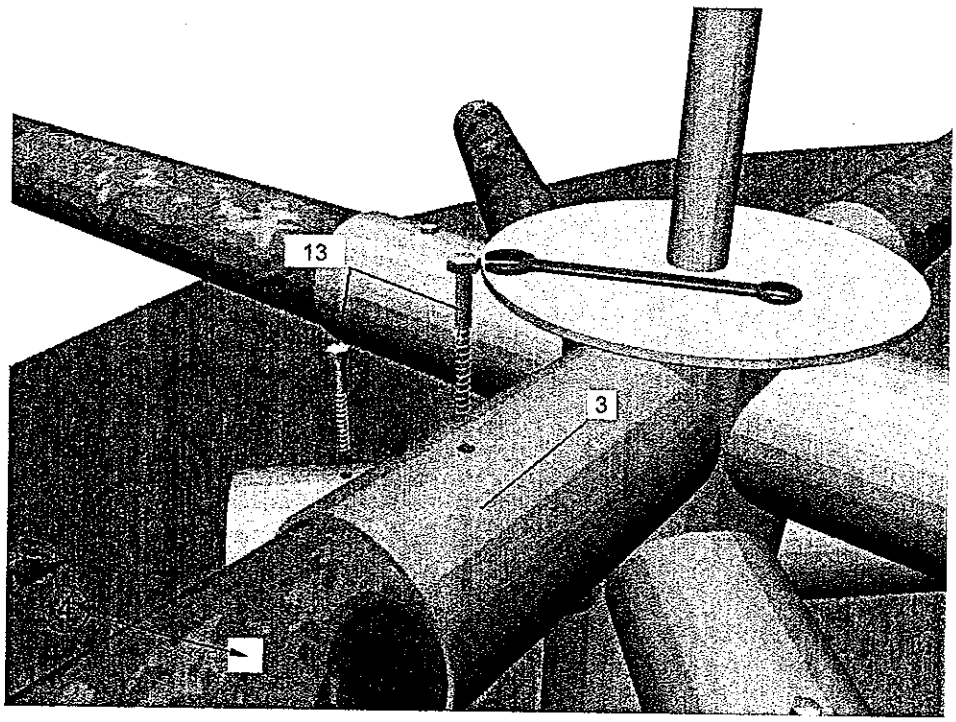

WICKSTEED playscapes

Mast Cap To Steel Upright Detail

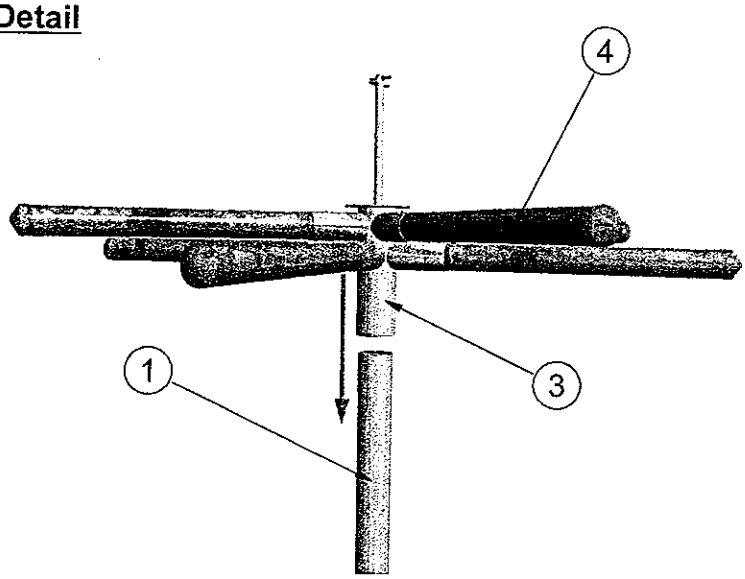

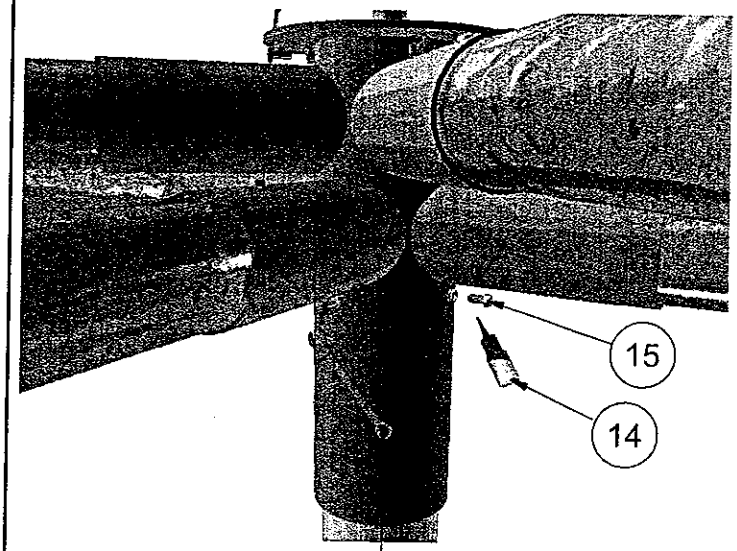

After Putting On The Post Cap
Grease The Hexagon Mast Screw
And Tighten Up

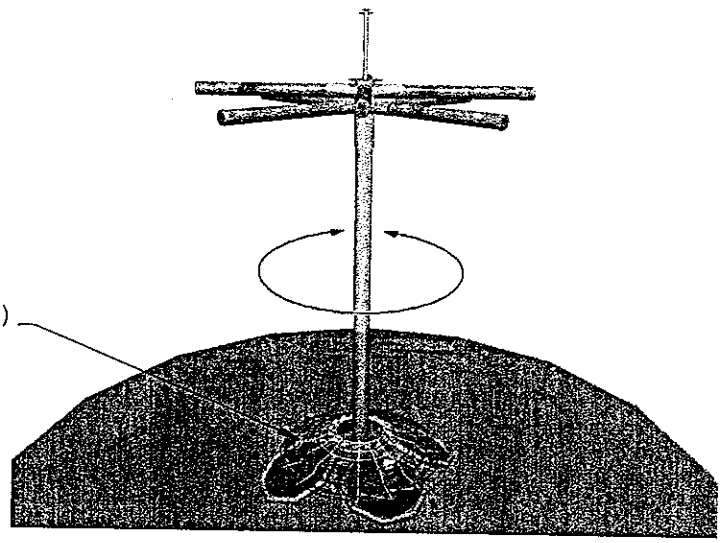

Lay The Net Part Packet (Pre Assembled)
With The Underside Around The Mast

WICKSTEED playscapes

Net Fixing Detail

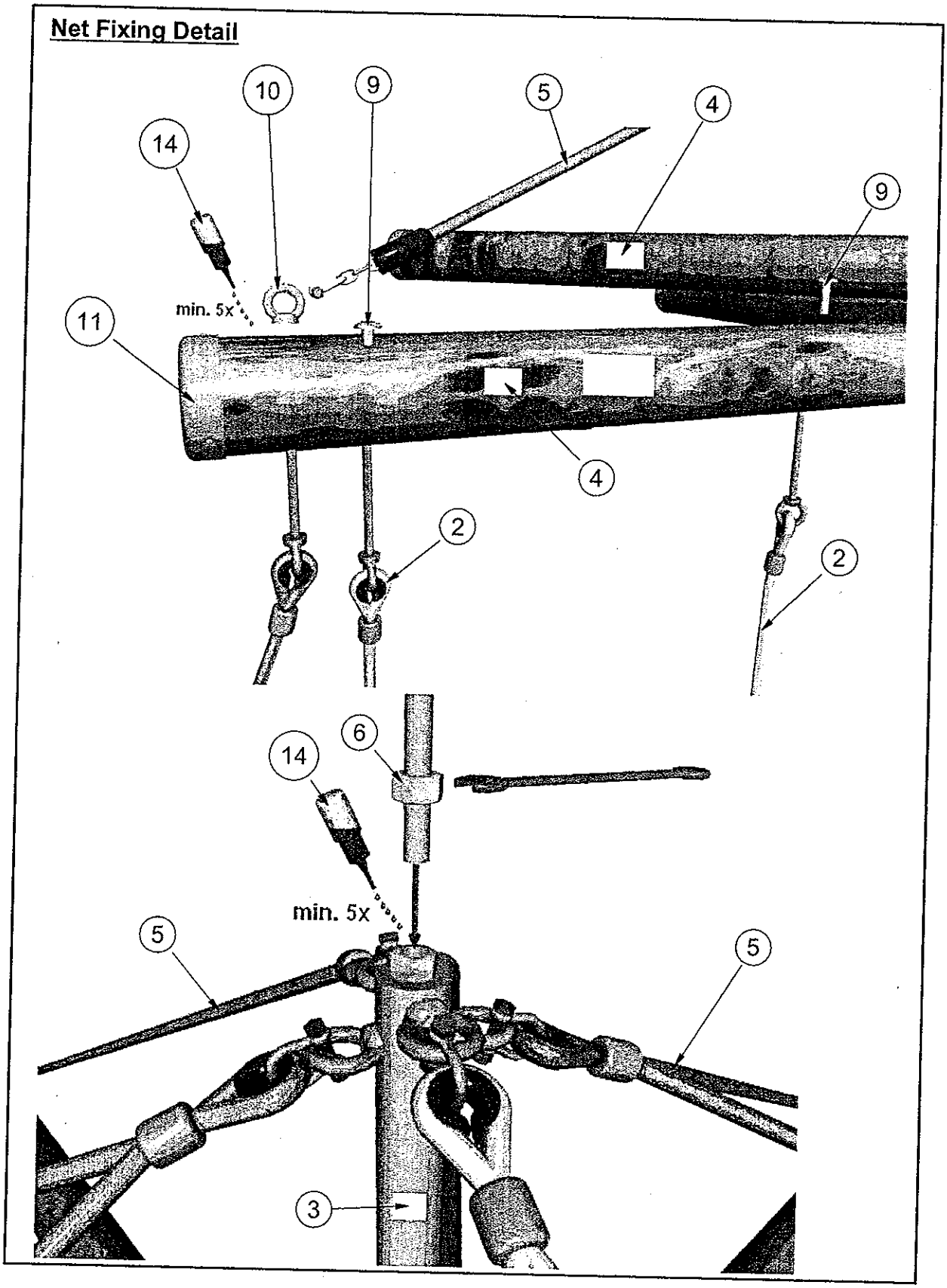

WICKSTEED playscapes

Net To Ground Fixing Detail

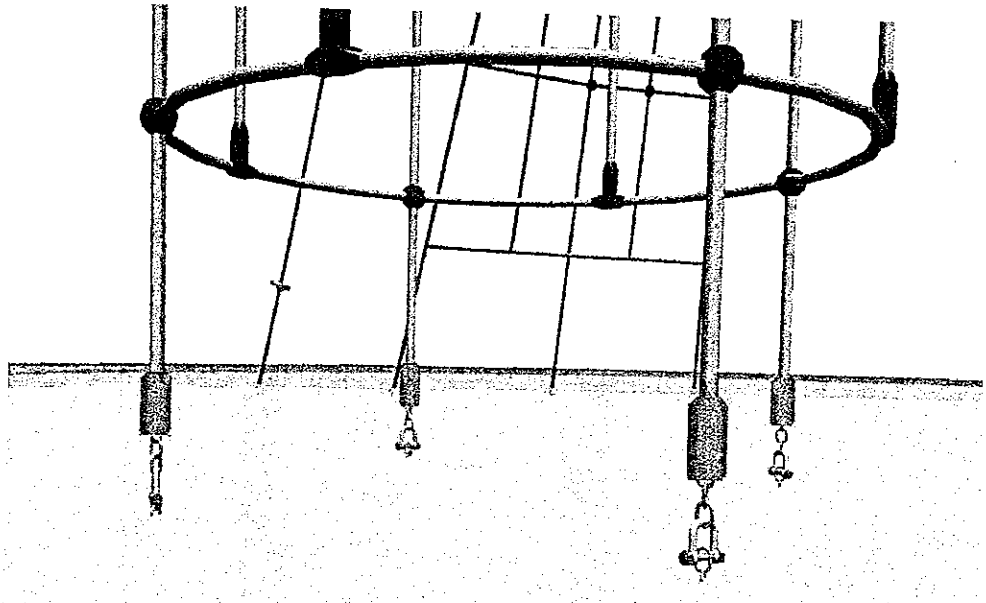

NOTE

Pay Careful Attention To Foundation Plan
1 - 7

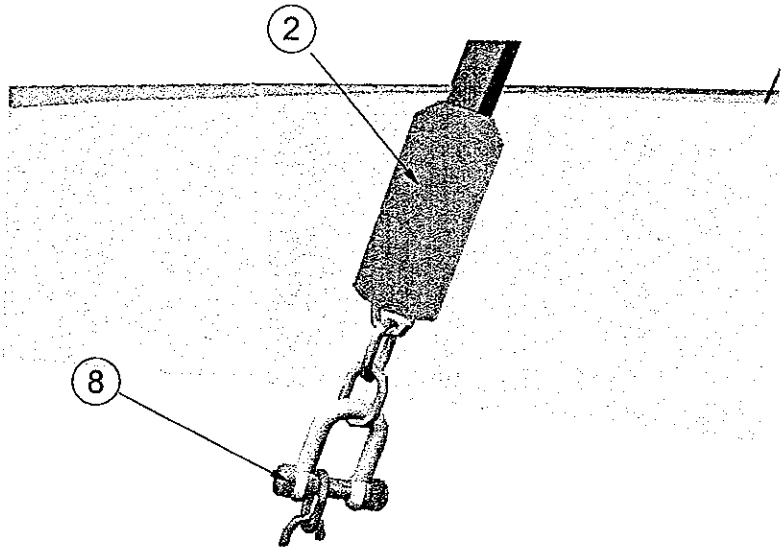

WICKSTEED playscapes

PARTS LIST			
ITEM	QTY	PART NUMBER	DESCRIPTION
1	1		Steel Mast 193.7mm Dia x 6.2 Lg
2	1		Play Part Pre Assembled
3	1		Mast Cap
4	8		Glulam Pole
5	4		Top Rope For Glulam Pole
6	1		Blue Flag inc Threaded Rod & M16 Nuts 2 Off
7	19		Type 8 Shackles Cambered Pre Assembled
8	20		Type 7 Chain For Foundations 1.3m Lg
9	17		M12 Torx Socket Pre Assembled
10	8		M12 Ring Nut
11	8		Red Cap 140 mm Dia
12	24		Fillister Head Screw 3.5 x 25
13	8		Wood Screw 10 x 100mm
14	2		Loctite
15			Hexagonal Mast Screw

COMPILED TE	REV	0									
	ECN	1574									
DATE: 12/12/08	SIG.	TE									
	DATE:	04/12/08									

WICKSTEED playscapes