S3 04 1:100
MARINE PARADE GROUND FLOOR EXTRACT

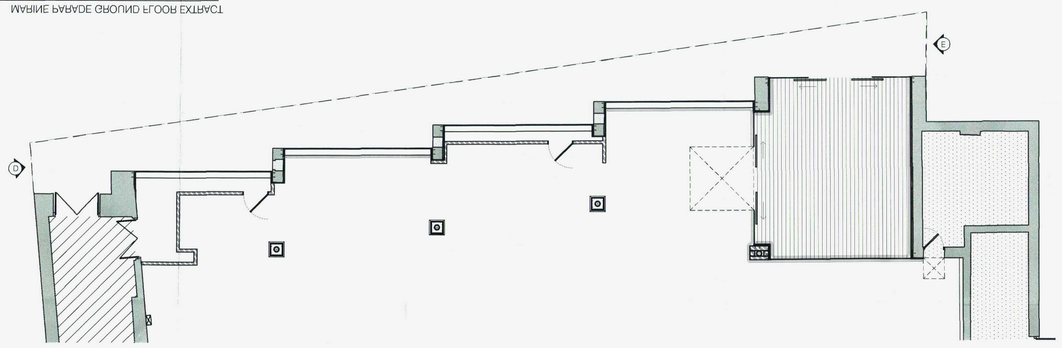

S3 03 1:100 PROPOSED FACADE
MARINE PARADE ELEVATION

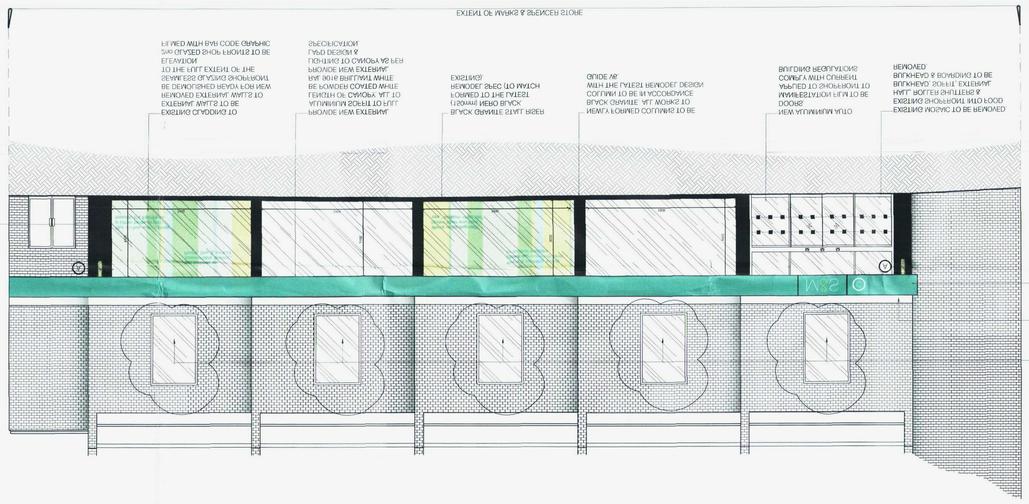

S3 05 1:100
MONTAGUE STREET GROUND FLOOR EXTRACT

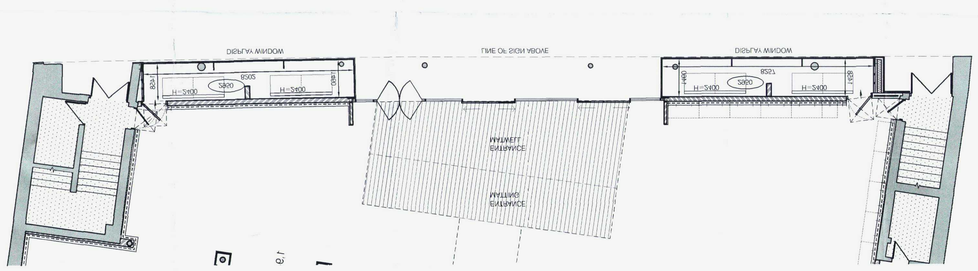
DISPLAY WINDOW
TIME OR ITEM VINYLS
DISPLAY WINDOW
H=3400
3000
3000
3000
H=3400
H=3400
H=3400
H=3400
3000
3000
3000
3000
600
600
600
600
2400
2400
2400