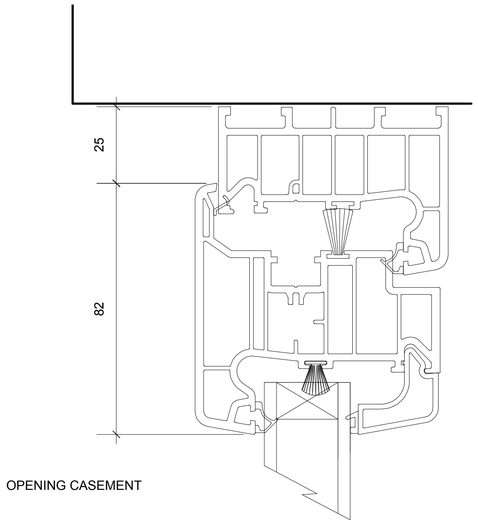

OPENING CASEMENT

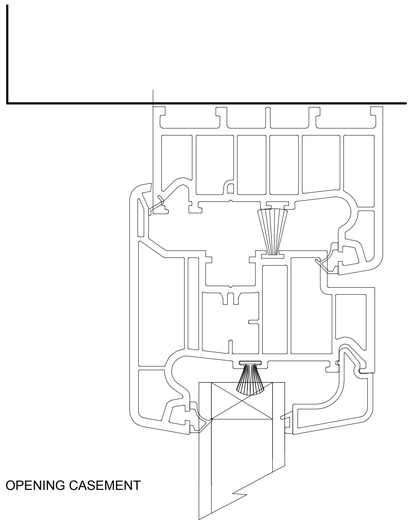

OPENING CASEMENT

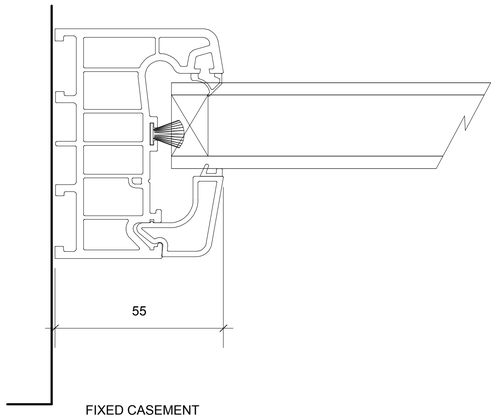

FIXED CASEMENT

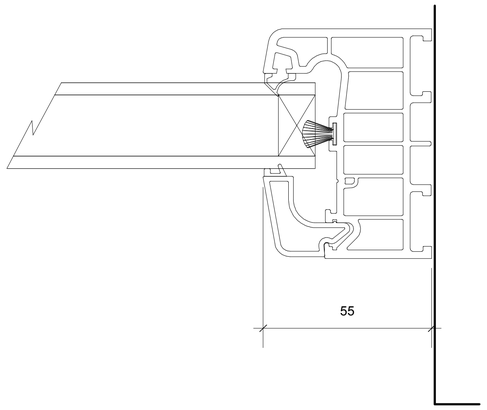

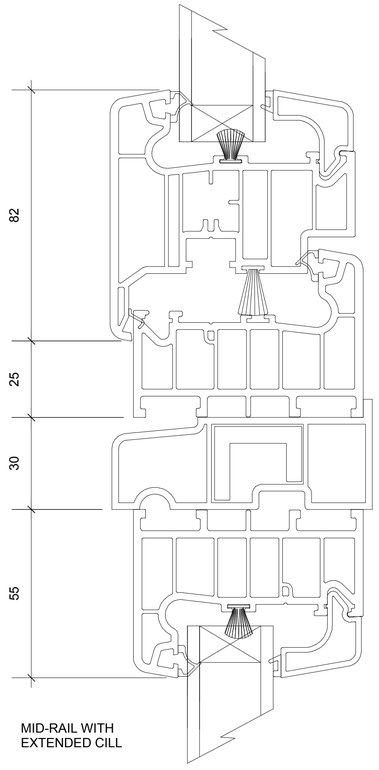

MID-RAIL WITH
EXTENDED CILL

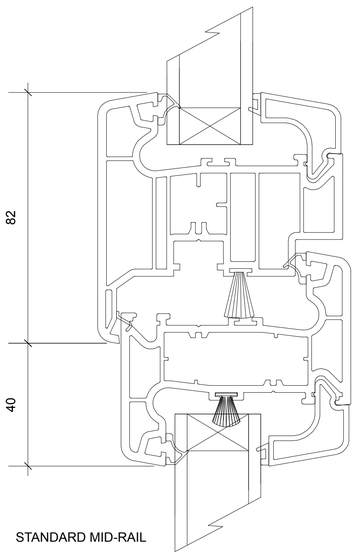

STANDARD MID-RAIL

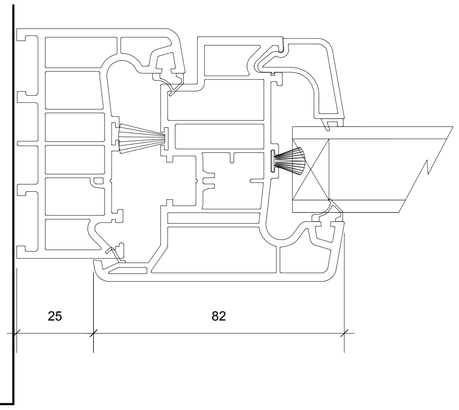

OPENING CASEMENT

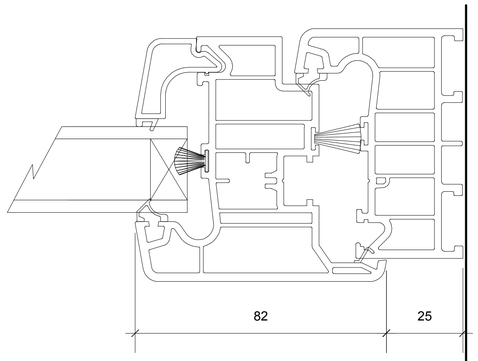

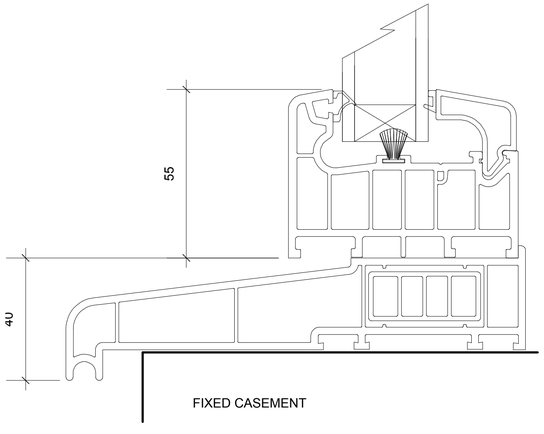

FIXED CASEMENT

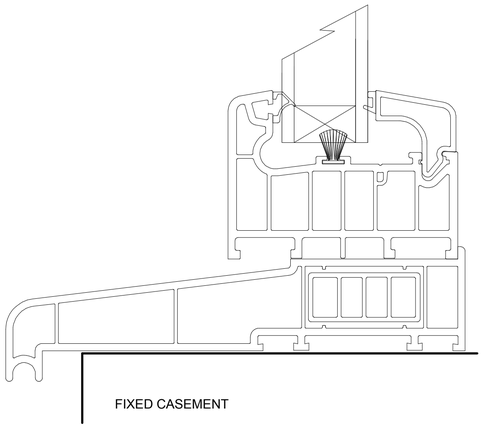

FIXED CASEMENT

CASEMENT DETAILS
Details provided by EUROCELL
MODUS SLIM

notes:

DRAWINGS ARE FOR PLANNING PURPOSES ONLY AND ARE NOT TO BE USED FOR CONSTRUCTION.
DO NOT SCALE FROM THESE DRAWINGS.
DIMENSIONS TO BE CHECKED ON SITE.

amendments:

Felce & Guy Partnership LLP
Architects
Studio 5 | English Close | Hove | BN3 7ET
T: 01273 736217 E: info@felceandguy.co.uk

project: Window replacement

location: Highgrove House 32-34
Winchester Road, BN11 4DH

client: Highgrove Care Home

drawing: Window Details - Sheet 3

scale: 1:1 | page: A1

drawn by: BK | checked by: SM

date: OCT. '23 | drawing number: **2766-26** | revision: --

© Felce & Guy Partnership LLP