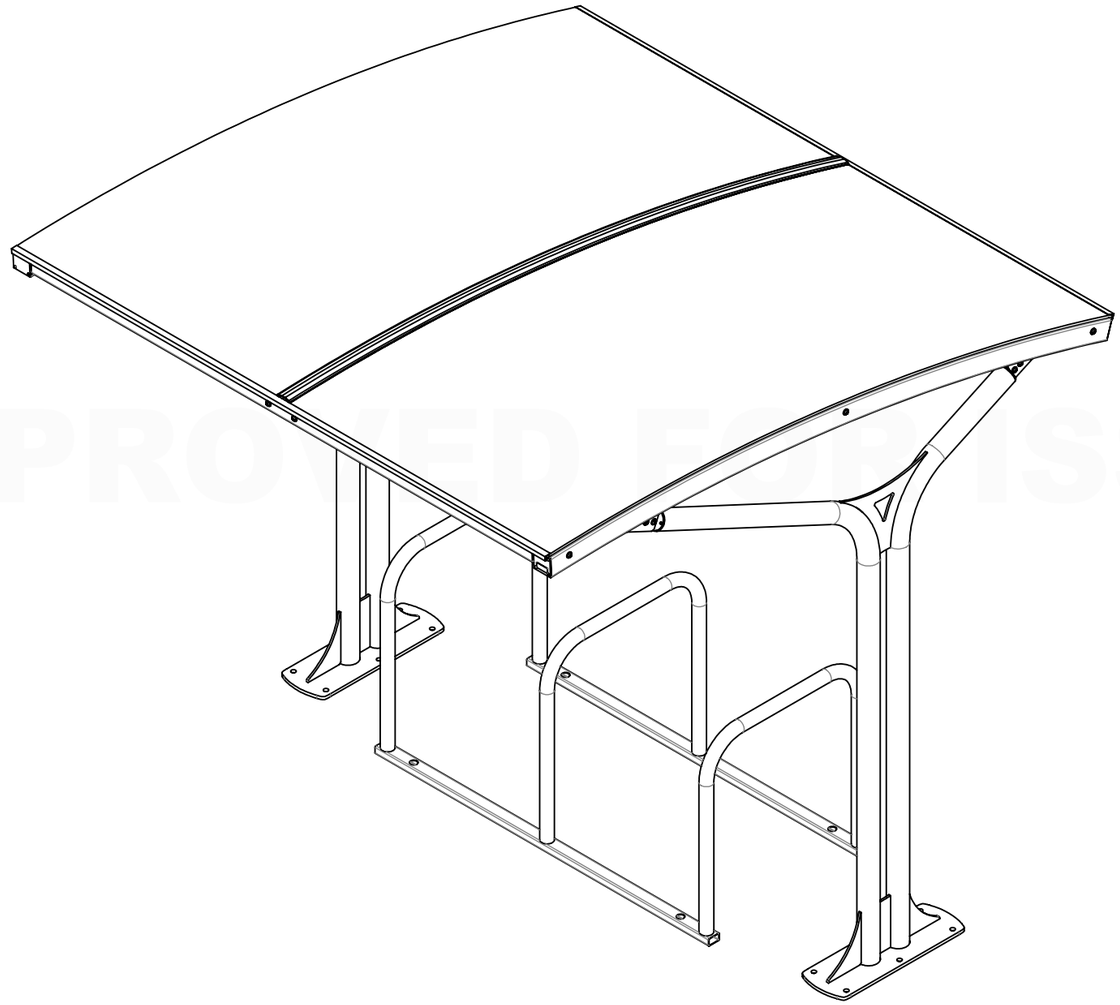

APPROVED FOR ISSUE

PRODUCT OVERVIEW:

2.4m BAYS EASTBROOK SHELTER 3651

FINISH:

POWDER COATED - RAL 9003

bailey streetscene
ADLINGTON BUSINESS PARK, LONDON ROAD,
ADLINGTON, CHESHIRE, SK10 4NL
t: 01625 855 900 f: 01625 874 153
w: baileystreetscene.co.uk

DRAWING NUMBER:	Doc. TYPE	SHEET:	SCALE:	DRW:	DATE:
BSSGA2484-1_0	GA	SHEET 1 OF 2	1:20 @A3	TS	08/02/2021
DRAWING TITLE: PRODUCT OVERVIEW - 2.4m BAYS EASTBROOK SHELTER 3651				CHK: OS	DATE: 08/02/2021
PART NUMBER: 2.4m BAYS EASTBROOK SHELTER 3651				APP: JF	DATE: 08/02/2021
PART CONFIGURATION: 2.4m TOASTRACK				DRAWING STATUS: APPROVED FOR ISSUE	
BSS JOB NUMBER: 3651	3rd ANGLE PROJECTION	DO NOT SCALE FROM DRAWING DIMENSIONS IN mm UNLESS STATED OTHERWISE		Doc.REV: 0	

REVISIONS					
REV.	BY	DESCRIPTION	DATE	CHKD	APVD

© All content copyright Bailey Streetscene Ltd

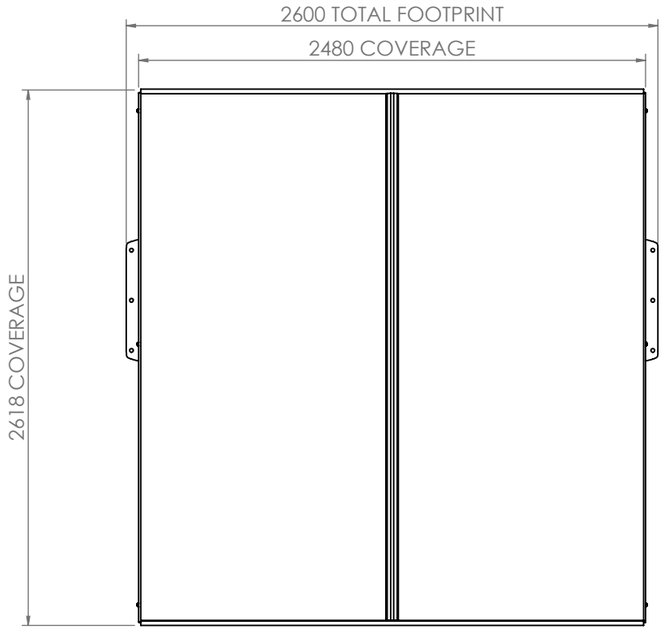

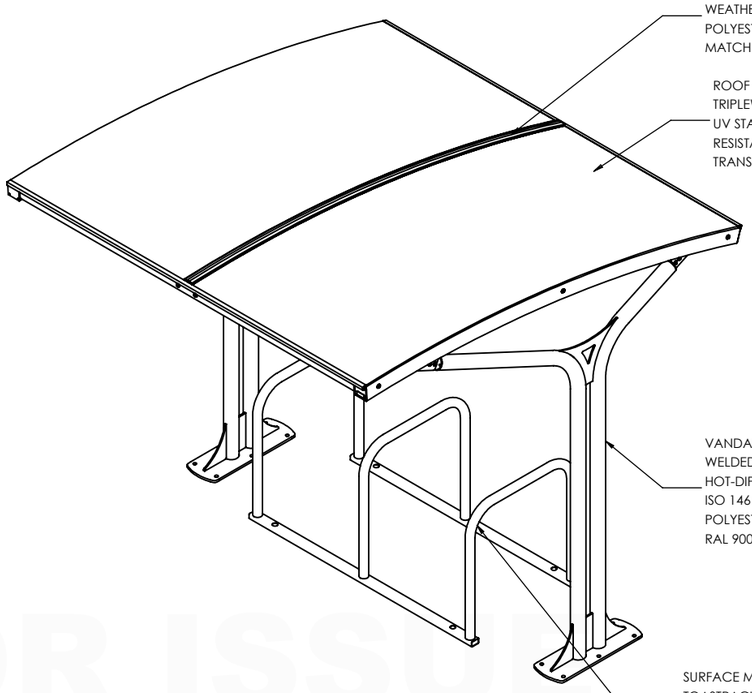

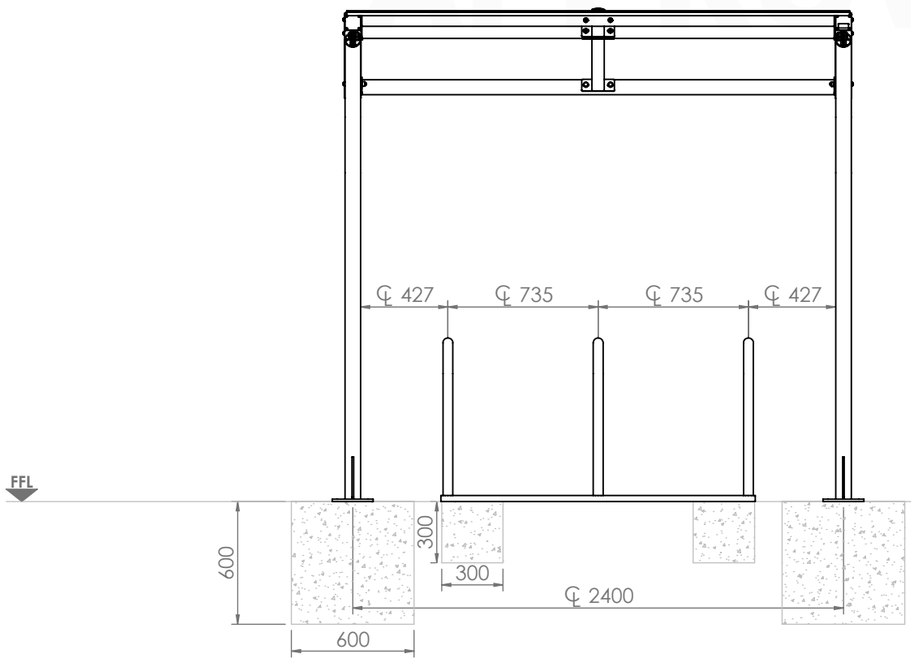

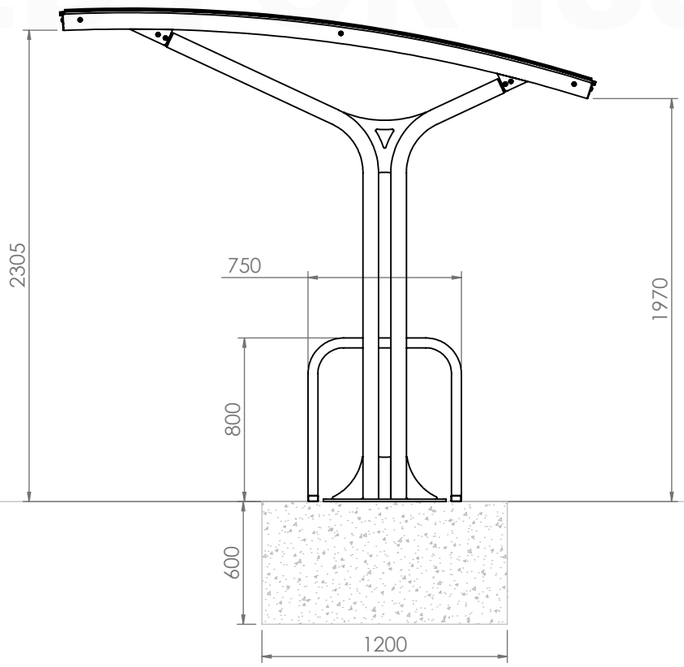

FOOTING OPTION:
RECOMMENDED Min. FOUNDATION AS SHOWN IN C16/20 CONCRETE . **LOCAL SITE ENGINEER TO DETERMINE APPROPRIATE SIZE AND COMPOSITION OF PAD BASED ON LOCAL GROUND CONDITIONS**.

EACH FOOT 6off Min. M12x120 RAWLBOLT / RESIN ANCHOR

FULL SLAB OPTION:
FULL WIDTH CONCRETE SLAB UNDERNEATH SHELTER REQUIRES STEEL REINFORCEMENT MESH.

APPROXIMATE TOTAL WEIGHT: **227.7 Kg**

GENERAL ARRANGEMENT:

2.4m BAYS EASTBROOK SHELTER 3651

APPROVED FOR ISSUE

bailey streetscene
ADLINGTON BUSINESS PARK, LONDON ROAD,
ADLINGTON, CHESHIRE, SK10 4NL
t: 01625 855 900 f: 01625 874 153
w: baileystreetscene.co.uk

DRAWING NUMBER:	Doc. TYPE	SHEET:	SCALE:	DRW:	DATE:
BSSGA2484-2_0	GA	SHEET 2 OF 2	1:30 @A3	TS	08/02/2021
DRAWING TITLE: GENERAL ARRANGEMENT - 2.4m BAYS EASTBROOK SHELTER 3651				CHK: OS	DATE: 08/02/2021
PART NUMBER: 2.4m BAYS EASTBROOK SHELTER 3651				APP: JF	DATE: 08/02/2021
PART CONFIGURATION: 2.4m TOASTRACK				DRAWING STATUS: APPROVED FOR ISSUE	
BSS JOB NUMBER: 3651	3rd ANGLE PROJECTION	DO NOT SCALE FROM DRAWING DIMENSIONS IN mm UNLESS STATED OTHERWISE		Doc.REV: 0	

NOTES:
APPROXIMATE WEIGHT - **227.7kg**

PRODUCTS WILL BE SUPPLIED WITH A SMALL IDENTIFICATION LABEL. IF YOU WOULD LIKE THIS REMOVED PRIOR TO DELIVERY PLEASE SPECIFY AT TIME OF ORDER

© All content copyright Bailey Streetscene Ltd