PLANNING DIVISION
PLAN No. AX0125108
DATE RECEIVED 04 NOV 2008

Householder Application for Planning Permission for works or extension to a dwelling.
Town and Country Planning Act 1990

Publication of planning applications on council web sites
Please note that with the exception of applicant contact details and Certificates of Ownership, the information provided on this application form and in supporting documents may be published on the council's website.
If any other information that is provided as part of the application which falls within the definition of personal data under the Data Protection Act and is not to be published on the council's website, please contact the council's planning department.

1. Applicant Name, Address and Contact Details

Title: Mr | First name: Kevin | Surname: Jarvis

Company name:

Street address: 26
Woodards View
Town/City: Shoreham-by-Sea
County: W. Sussex
Country: United Kingdom
Postcode: BN43 5LH

	Country Code	National Number	Extension Number
Telephone number:	[redacted]	[redacted]	
Mobile number:			
Fax number:			

Email address: KevinMJarvis@btopenworld.com

Are you an agent acting on behalf of the applicant? ○ Yes ◉ No

2. Agent Name, Address and Contact Details

No Agent details were submitted for this application

3. Description of Proposed Works

Please describe the proposed works:

Micro-wind turbine system (Windsave WS 1200)
To be attached to west elevation gable, extending up to 3m above ridge level. Position of attachment shown in attached photograph and 1:500 scale plan.
Colour: Pebble Grey - shown in example photographs attached
Detail construction drawing, specification and compliance with applicable regulations attached.

Has the work already been started without planning permission? ○ Yes ◉ No

4. Site Address Details

Full postal address of the site (including full postcode where available)

House: 26 | Suffix:
House name:
Street address: Woodards View
Town/City: SHOREHAM-BY-SEA
County: West Sussex
Postcode: BN43 5LH

Description of location or a grid reference (must be completed if postcode is not known):
Easting: 520906
Northing: 104509

Description:

5. Pedestrian and Vehicle Access, Roads and Rights of Way

Is a new or altered vehicle access proposed to or from the public highway? ○ Yes ◉ No

Is a new or altered pedestrian access proposed to or from the public highway? ○ Yes ◉ No

Do the proposals require any diversions, extinguishment and/or creation of public rights of way? ○ Yes ◉ No

6. Pre-application Advice

Has assistance or prior advice been sought from the local authority about this application? ◉ Yes ○ No

If Yes, please complete the following information about the advice you were given (this will help the authority to deal with this application more efficiently):

Officer name:

Title: Ms First name: Hanna Surname: Barker

Reference: -

Date: 29/02/2008

Details of the pre-application advice received:

Application requirements
Electronic documents below
Site Plan 1:1,250 + 1:500 showing point of attachment
Drawing of system with dimensions
Colour image of turbine
Photo of house gable
Fee 35

7. Trees and Hedges

Are there any trees or hedges on your own property or on adjoining properties which are within falling distance of your boundary? ○ Yes ◉ No

Will any trees or hedges need to be removed or pruned in order to carry out your proposal? ○ Yes ◉ No

8. Parking

Will the proposed works affect existing car parking arrangements? ○ Yes ◉ No

9. Council Employee / Member

Is the applicant or agent related to any member of staff or elected member of the council? ○ Yes ◉ No

10. Site Visit

Can the site be seen from a public road, public footpath, bridleway or other public land? ◉ Yes ○ No

If the planning authority needs to make an appointment to carry out a site visit, whom should they contact? (Please select only one)

○ The agent ◉ The applicant ○ Other person

11. Materials

Please state what materials (including type, colour and name) are to be used externally (if applicable):

Others - description:

Type of other material: Turbine Assembly

Description of *existing* materials and finishes:

No change to existing building or structures

Description of *proposed* materials and finishes:

Generator Body, Tailfin and blades are finished to RAL 7032 (Pebble Grey)
Support Pole and Brackets are hot-dipped galvanised finish
Refer to Photograph "Example 2.jpg"

Are you supplying additional information on submitted plan(s)/drawing(s)/design and access statement? ◉ Yes ○ No

If Yes, please state references for the plan(s)/drawing(s)/design and access statement:

Example 2.jpg

12. Certificates (Certificate A)

Certificate of Ownership - Certificate A

Town and Country Planning (General Development Procedure) Order 1995 Certificate under Article 7

I certify/The applicant certifies that on the day 21 days before the date of this application nobody except myself/ the applicant was the owner (owner is a person with a freehold interest or leasehold interest with at least 7 years left to run) of any part of the land or building to which the application relates.

Title: Mr First name: Kevin Surname: Jarvis

Person role: Applicant Declaration date: 28/02/2008 ☒ Declaration made

12. Certificates (Agricultural Holdings Certificate)

Agricultural Holding Certificate

Town and Country Planning (General Development Procedure) Order 1995 Certificate under Article 7

Agricultural Land Declaration - You Must Complete Either A or B

(A) None of the land to which the application relates is, or is part of an agricultural holding.

Title: Mr First name: Kevin Surname: Jarvis

Person role: Applicant Declaration date: 28/02/2008 ☒ Declaration Made

(B) I have/The applicant has given the requisite notice to every person other than myself/the applicant who, on the day 21 days before the date of this application, was a tenant of an agricultural holding on all or part of the land to which this application relates, as listed below:

Notice recipient	Date notice served

Title: Mr First Name: Kevin Surname: Jarvis

Person role: Applicant Declaration date: 28/02/2008 ☒ Declaration Made

13. Declaration

I/we hereby apply for planning permission/consent as described in this form and the accompanying plans/drawings and additional information. ☒

Date 03/03/2008

...UR DIS... ...NCIL
PLANNING L...
PLAN No. Add0125168
DATE 04 MAR 2008

Compliance

The Windsave WS1200 'Small Wind Turbine System' complies with the following regulations:

- BS EN 61400 Part 2: (1996) 'Safety of Small Wind Turbines'.
- EU Directive 89/336/EEC 'Electro-magnetic Compatibility'
- BS EN 61000-6 Parts 1 & 3: (2001)
- BS EN 60335 Part 1: (1994) 'Safety of Household Electrical Appliances'
- EU low Voltage Directive 73/23/EEC 'Safety of electrical equipment designed for use with a voltage rating of between 50 and 1000 V for alternating current and between 75 and 1500 V for direct current'
- BS7671: IEE Wiring Regulations (Safety of electrical installations, including wiring and protection circuit requirements)
- Engineering Recommendation G83/1: (2003) - Recommendation for the connection of small scale embedded generators {up to 16 amp per phase} in parallel with public low voltage distribution networks
- ESQCR (Electricity, Safety, Quality & Continuity Regulations: 2002)
- Building Regulations: England & Wales
- Building Regulations: Scotland
- RoHS Regulations: 2002 The 'Restriction of Hazardous Substances' in electrical and electronic equipment'.
- WEEE (Waste Electrical & Electronic Equipment) Directive 2003. The WEEE Directive aims to prevent WEEE arising, to encourage reuse, recycling and recovery of WEEE and to improve the environmental performance of all operators involved in the lifecycle of electrical and electronic equipment, especially those dealing with WEEE.
- CE72 Installers and Specifier's Guidance for: Installing small wind-powered electricity generating systems,' as issued by Energy Savings Trust 'best practice'
- Health & Safety at Work Act: 1974; including daughter regulations and supporting Codes of Practice (COP)

Product Specification

Model: WS1200
AC Input (Mains): 230 Volts (nominal) ac, @ 50Hz
Power Input (Mains): 6 Watts (Note 2)
Rated Power Output: 1.25kW @ rated wind speed (Note 3)
Rated Wind Speed: 12.5 m/s (Note 8)
Cut-in Wind Speed: 3.5 to 5 m/s @ hub height (Note 8)
Cut-out Wind Speed: 14 m/s @ hub height (Note 8)
Reference Extreme Wind Speed: 35 m/s @ hub height
Operating Temperature Range, Generator: -15C through +40C (Note 4)
Weight, Generator System: 25kgs (Note 5)
Weight, Plug 'n' Save™: 11kgs
Dimensions, Generator Assembly: 449mm long x 170mm wide x 350mm height
Swept Area, Blade Assembly: 2.4m^2
Swept Diameter, Blade Assembly: 1.75m
Dimensions, Plug 'n' Save™: 535mm long x 315mm wide, 130mm deep
Operating Speed Range of Blades: 100 – 900 rpm (Note 6)
Degree of Protection, Generator Assembly: IP56
Degree of Protection, Plug 'n' Save™: IP30
Expected Safe Life: 10 years (Note 7)
General references above relate to BS EN 61400 part 2
Design and specifications are subject to change without notice.

DISTRICT COUNCIL
PLANNING
PLAN No. Arxc012568
DATE RECEIVED 04 MAR 2008

1. Values are nominal only, as slight variations will be present from unit to unit.
2. Power consumption of the Plug 'n' Save™ unit in 'stand by' mode
3. Typically 12.5 m/s wind speed at the Propeller Blade Assembly is equivalent to an output of 1kW from the Plug 'n' Save™ unit.
4. At altitudes < 1000m above sea level.
5. This Weight Excludes Support Pole & Brackets.
6. Useful power output range.
7. This is the expected safe life of the product however; the actual life will depend on the conditions the system has been subjected to.
8. Wind speed figures assume a steady value, as gusts to this figure will not always produce maximum output.

A3

NOTES:

1. GENERATOR BODY, TAILFIN AND BLADES ARE FINISHED TO RAL 7032 (PEBBLE GREY)
2. SUPPORT POLE AND BRACKETS ARE HOT-DIPPED GALVANISED FINISH

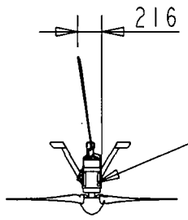

GENERATOR - YAWS THROUGH 360 DEGREES TO TRACK WIND

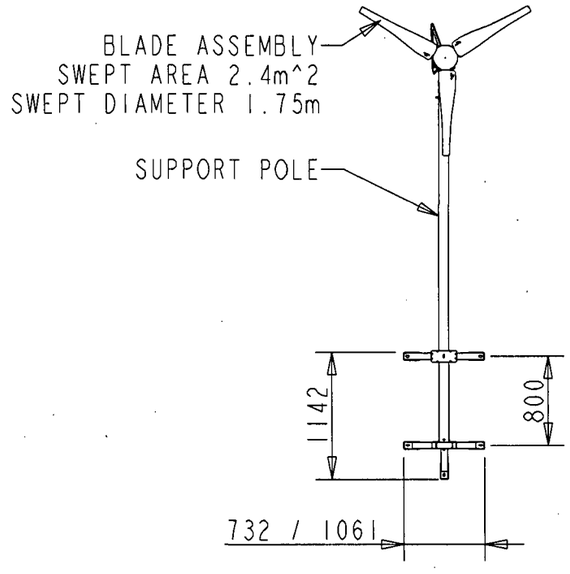

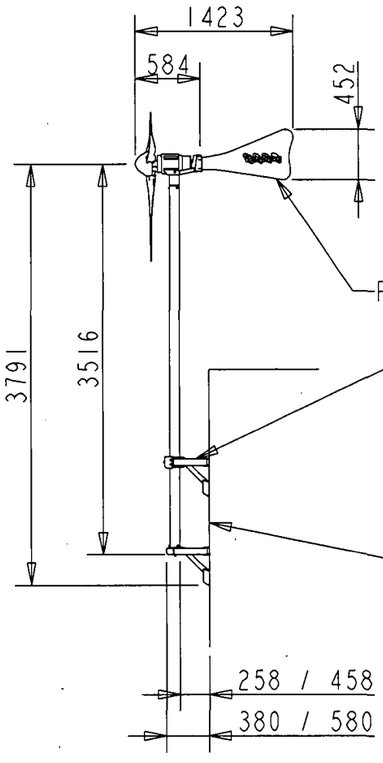

FURLING TAILFIN

ANTI-VIBRATION WALL BRACKETS
250mm & 450mm STANDOFF SETS AVAILABLE
DIMENSIONS ANNOTED **** / ****
SHOW RESPECTIVE SIZES

BUILDING SHOWN THIS VIEW ONLY FOR VISUALISATION PURPOSES
ACTUAL POSITION TO BE DETERMINED BY SURVEY

PLANNING DIVISION
PLAN No. A060125&8
DATE RECEIVED 04 MAR 2008

REVISION HISTORY				
1	INITIAL RELEASE	7-Sep-07	--	
ISSUE	DESCRIPTION	DATE	CHG No	

GENERAL TOLERANCES	
LINEAR:	±0.40
HOLES Ø12.0 & UNDER:	±0.1
HOLES OVER Ø12.0:	±0.25
ANGULAR:	±0.5°
DIMENSIONS IN MILLIMETRES (UNLESS STATED)	
INITIAL MODEL BY:	M.LUMSDAINE

3RD ANGLE PROJECTION

DRG CREATED IN ProENG 2001

MATERIAL: --

FINISH: SEE NOTES

DESCRIPTION: WINDSAVE SYSTEM USING: LPE ANTIVIBRATION BRACKETS 250/450MM

DRAWING NO.: WS1200-ASSEMBLED-ANTIVIBE

THIS DRAWING IS STRICTLY CONFIDENTIAL AND MAY ONLY BE USED FOR PLANNING PURPOSES
THE USE FOR ANY OTHER PURPOSE REQUIRES THE WRITTEN PERMISSION OF WINDSAVE Ltd.

SHEET: 1 OF 1

SCALE: 1:50



DISTRICT COUNCIL
PLANNING DIVISION
PLAN No. Ard012568
DATE 04 MAR 2008

EXAMPLE 1.
- WS1200 Wind Turbine Installation

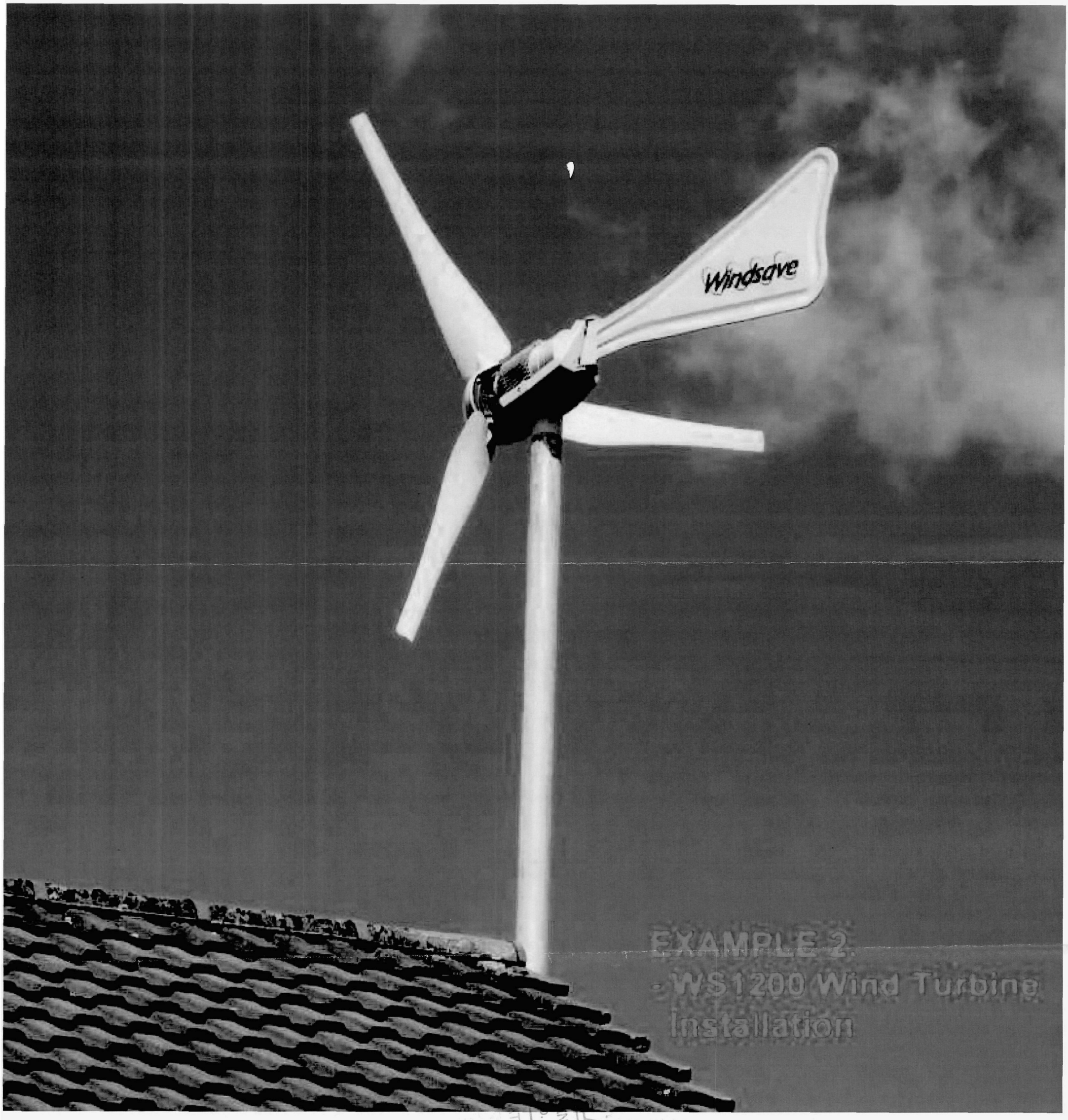

EXAMPLE 2.
- WS1200 Wind Turbine Installation

COUNCIL
ANNING D ION
Proto25b8
0 4 MAR 2008



Planning Portal

PLANNING DIVISION
PLAN No. A06012568
DATE RECEIVED 04 MAR 2008

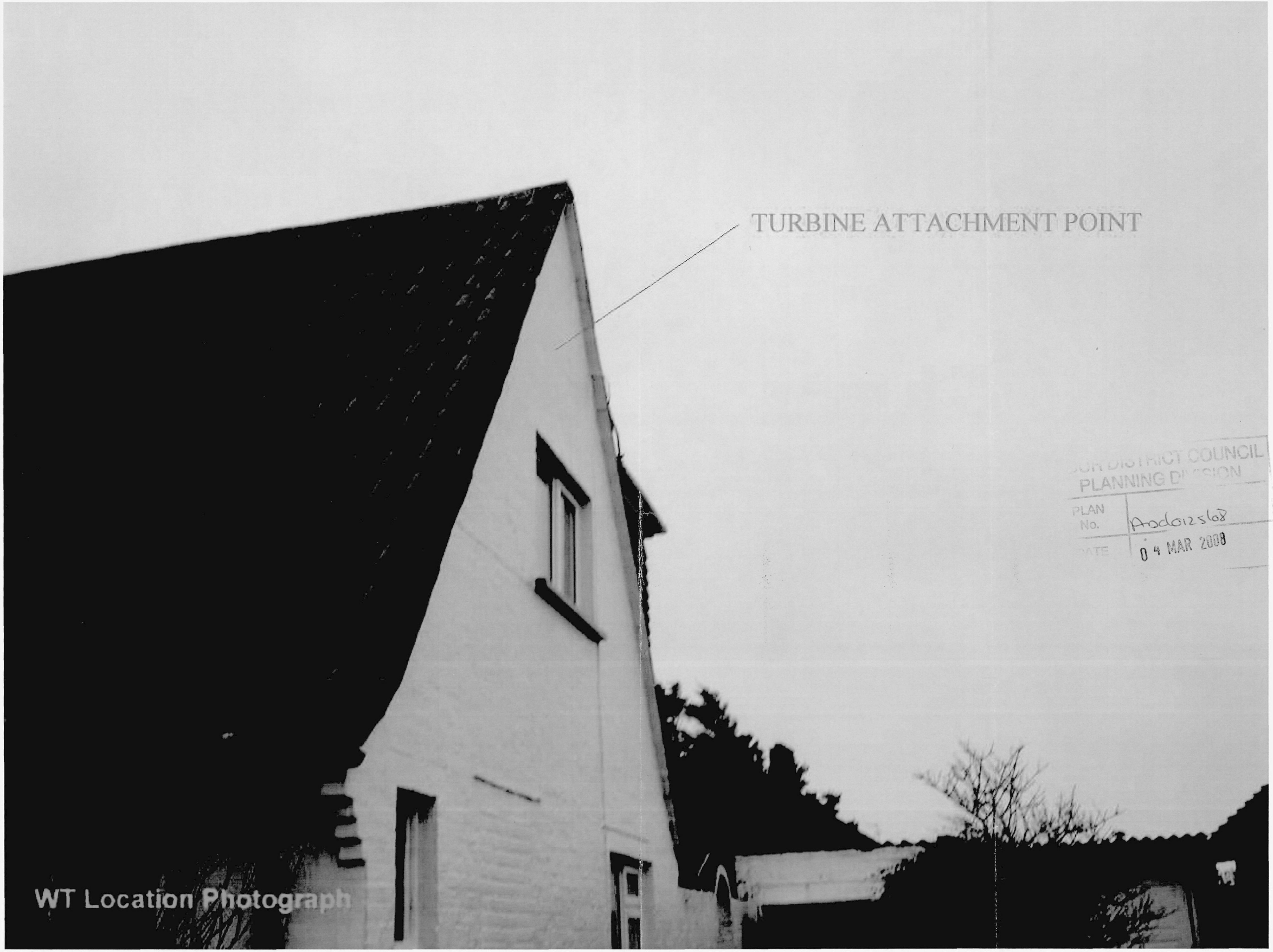

PLANNING DIVISION
PLAN No. Ando125168
DATE 04 MAR 2008



© Crown Copyright. Licence number 100042435

PLANNING
PLAN No. A060125b
DATE RECEIVED 04 MAR 2008