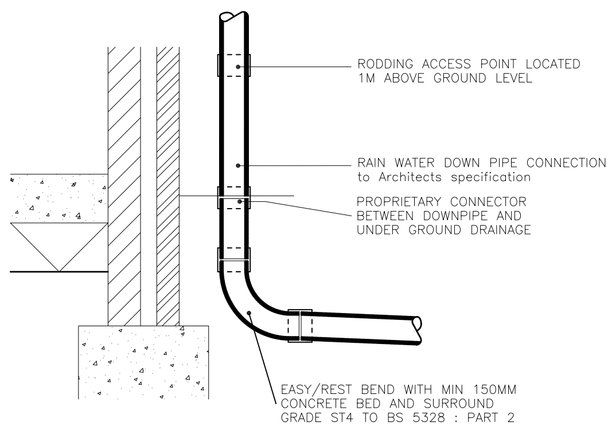


## TYPICAL RAIN WATER DOWNPIPE DETAIL

SCALE 1:20

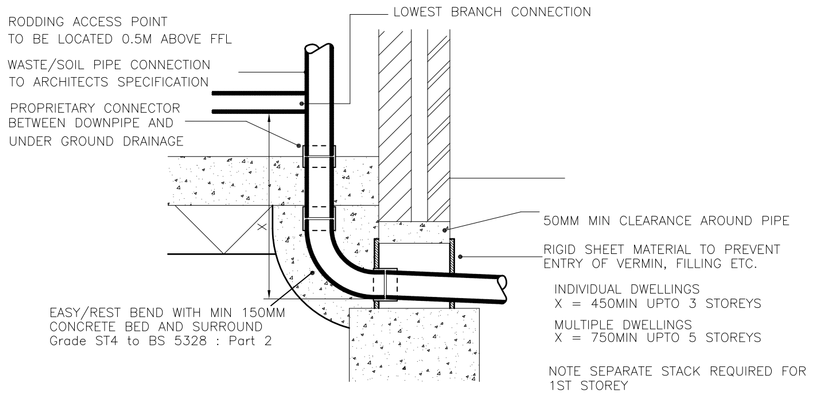


## TYPICAL SOIL VENT PIPE DETAILS

SCALE 1:20

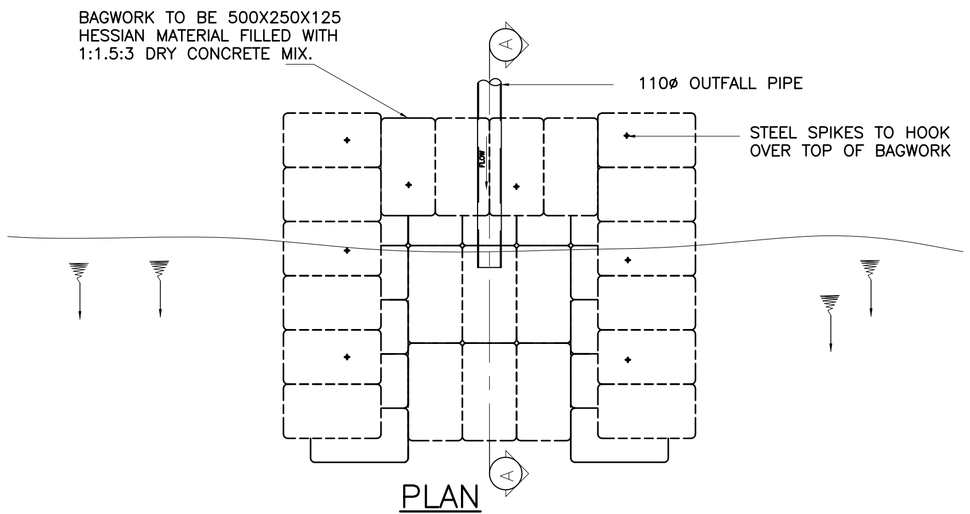


## PLAN

## OUTFALL DETAIL

SCALE 1:20

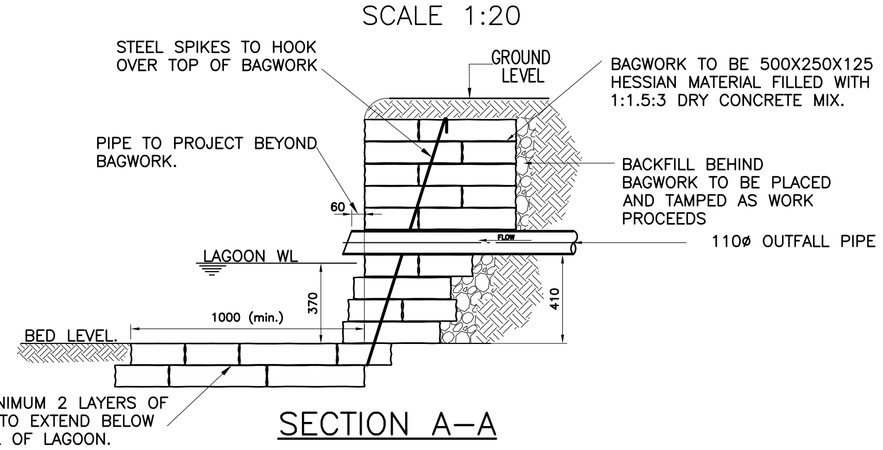


## SECTION A–A

1. BAGWORK TO BE 500X250X125 HESSIAN MATERIAL FILLED WITH 1:1.5:3 DRY CONCRETE MIX.
2. BACKFILL BEHIND BAGWORK TO BE PLACED AND TAMPED AS WORK PROCEEDS.
3. MILD STEEL (10mm DIA.) BARS WITH HOOKED ENDS AND 500mm LONG TO BE DRIVEN INTO TOP COURSES VERTICALLY (AS MARKED ON PLAN).
4. BAGWORK FOLLOWS THE LINE OF THE BANK. NO PART OF THE HEADWALL TO PROJECT INTO THE FLOW AREA.
5. ALL SURPLUS SPOIL FROM EXCAVATION FOR THE STRUCTURE AND PIPE MUST BE REMOVED FROM SITE.
6. BAGWORK MAY BE REQUIRED TO PROTECT THE BED AND OPPOSITE BANK DOWNSTREAM OF THE OUTFALL.

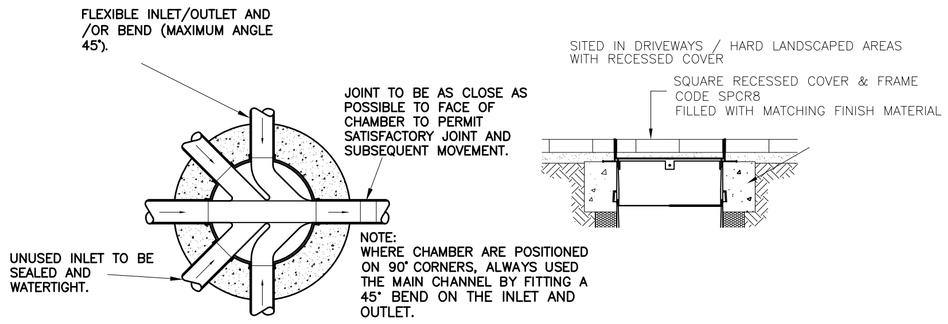


## PLAN

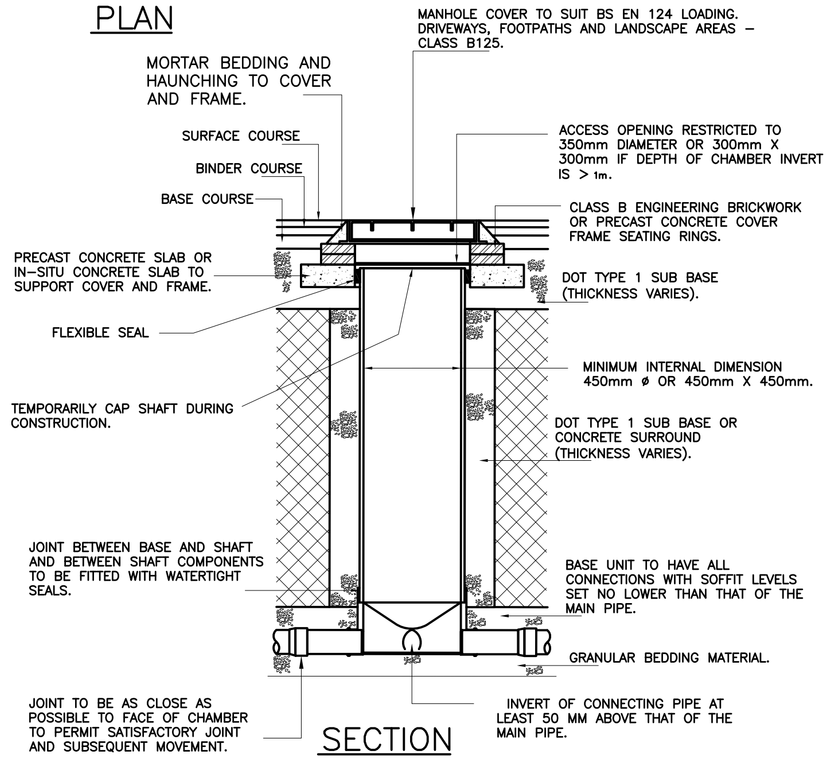


## SECTION

## TYPE 3 – 450P POLYPROPYLENE INSPECTION CHAMBER (MAX. DEPTH 3.0M TO PIPE SOFFIT).

SCALE 1:20

NOTE: PLASTIC CHAMBERS AND RING SHALL COMPLY WITH BS EN 13598–1 AND BS EN 13598–2 OR HAVE EQUIVALENT INDEPENDENT APPROVAL.

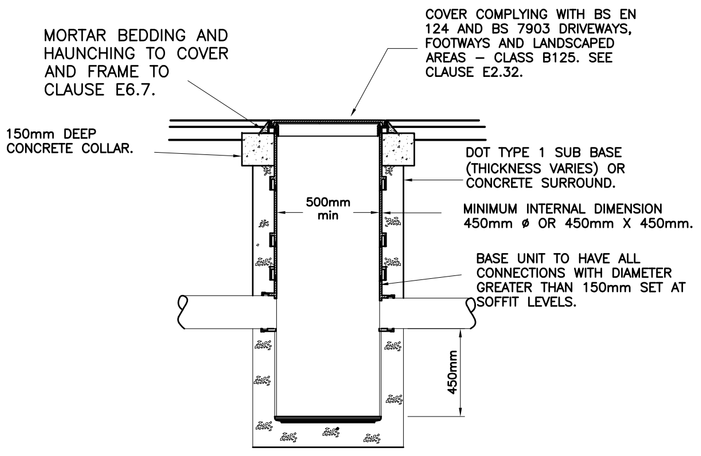


## TYPE 3A – 500P POLYPROPYLENE SILT TRAP CHAMBER

SCALE 1:20

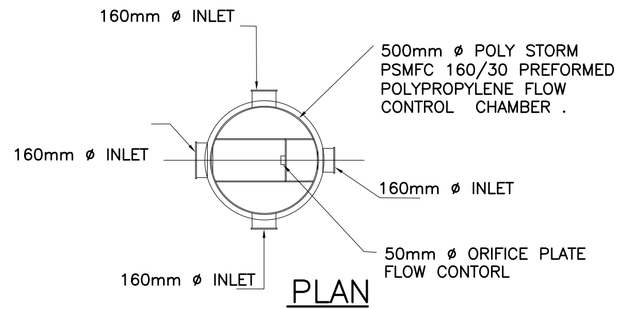


## PLAN

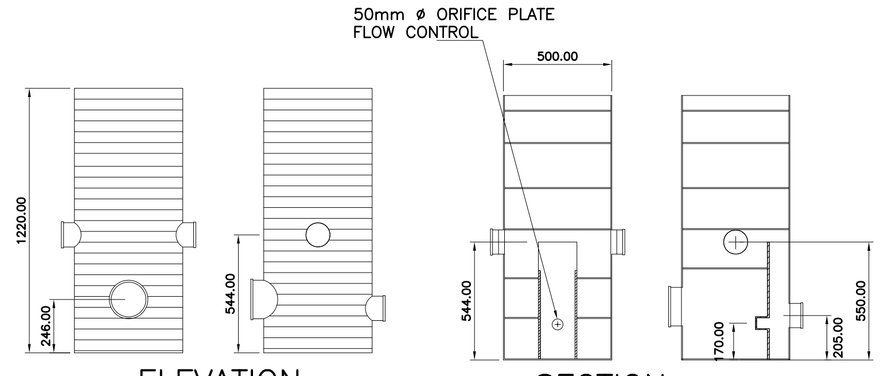


## ELEVATION

## SECTION

## TYPE 3B – FLOW CONTROL MANHOLE

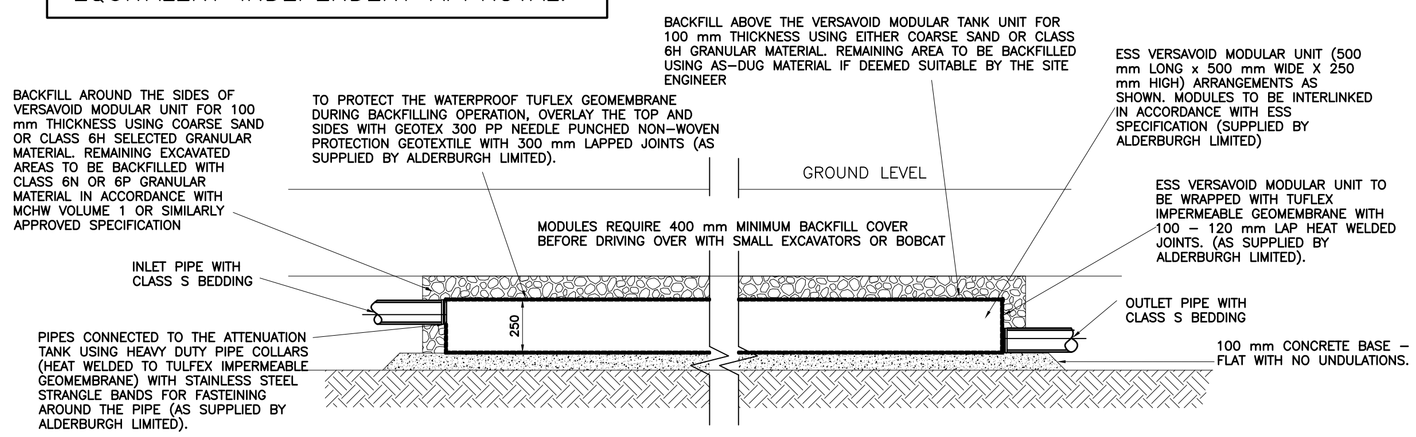


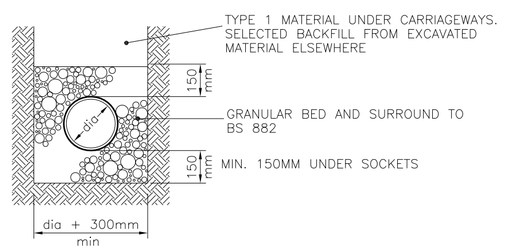


## TYPE 'S'

(BEDDING FACTOR – 2.2)

Drainage with more then 1.2m cover

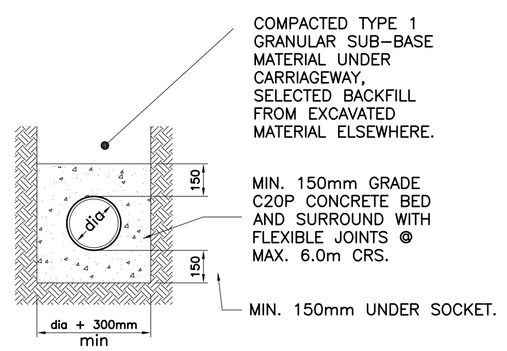


## CONCRETE PIPE BEDDING

## PIPE BEDDING DETAIL

SCALE 1:20

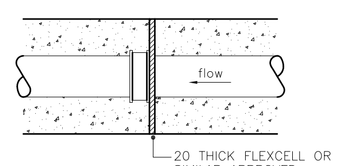


FLEXIBLE JOINT DETAIL
For Sleeved Pipes

## TYPICAL PIPE JOINTING DETAIL

SCALE 1:20

In addition to these notes, reference shall be made to the specification of works and the relevant Architect's and Specialist's drawings and specifications.

The Contractor is responsible for verifying all site dimensions before commencing work.

All dimensions are in millimetres unless noted otherwise.

This drawing has been produced electronically and may have been photo reduced or enlarged when printed or copied. Dimensions on this drawing shall not be scaled. Work only to figured dimensions. Any dimensional discrepancies errors or omissions are to be reported to the engineer immediately.

Levels are in metres unless noted otherwise to Ordnance Survey datum.

The Contractor is responsible for the stability of the building whilst the works are in progress.

NOTES

1. THIS DRAWING IS BASED ON DRAWING NO.26696–01 –10 BY INATURE ARCHITECTURE AND DESIGN LIMITED.
2. THIS DRAWING IS TO BE READ IN CONJUNCTION WITH THE FOLLOWING DRAWING:

   54932/10 DRAINAGE LAYOUT
3. CONTRACTOR IS TO TAKE NECESSARY PRECAUTIONS TO ENSURE THAT TRENCHES ARE KEPT CLEAR OF GROUND WATER DURING CONSTRUCTION.
4. ALL DRAINAGE WORKS TO BE CARRIED OUT IN ACCORDANCE WITH "SEWERS FOR ADOPTION" 7TH EDITION.
5. ALL ADOPTED PIPEWORK TO BE 100ø VITRIFIED CLAY UNLESS NOTED OTHERWISE.
6. ALL PIPEWORK THROUGH WALLS TO BE IN ACCORDANCE WITH THE BUILDING REGULATIONS.
7. ALL PIPEWORK UNDER ROADS WITH LESS THAN 900MM COVER TO HAVE 150MM CONCRETE SURROUND.
8. MINIMUM GRADIENT TO DRAINS TO BE 1:80 FOR 110ø OR 110ø FW AND 1:100 FOR 110ø SW.
9. POSITIONS OF MANHOLES SHOWN ON THIS DRAWING ARE INDICATIVE ONLY. ACTUAL LOCATIONS TO BE FINALIZED ON SITE.
10. PROVIDE CONCRETE LINTELS OVER OPENINGS WHERE PIPES PASS THROUGH WALLS. ALLOW FOR 150MM CLEARANCE ALL ROUND PIPE.

ALL DIMENSIONS AND LEVELS TO BE CHECKED AND CONFIRMED BY THE ARCHITECT PRIOR TO CONSTRUCTION.

| REV | DESCRIPTION | DATE | BY |
|---|---|---|---|
| B | OUTFALL & TANK DETAILS | 18/11/19 | JS |
| A | ADC COMMENTS | 18/11/19 | JS |
| 0 | ORIGINAL ISSUE | 23/10/19 | JS |

DIXON HURST
CONSULTING CIVIL & STRUCTURAL ENGINEERS
HEVERSHAM HOUSE, 18–22 BOUNDARY ROAD, HOVE, BN3 4EF
T: (01273) 421444 F: (01273) 420008 E: hove@dhk.co.uk
www.dhk.co.uk
Registered in England No. 3438720 – Registered Office 4 Frederick Terrace, Brighton BN1 1AX.

CONTRACT

**148 BRIGHTON ROAD LANCING, WEST SUSSEX**

DRAWING

**DRAINAGE DETAILS**

| DRAWING No. | REV | CHECKED |
|---|---|---|
| 54932 / 11 | B | |
| SCALE 1:20 @ A1 / DATE OCT 19 | DRAWN JS | APPROVED |
| AutoCAD Ref: 54932–10.dwg | | |

This drawing is produced using Autocad: Only written dimensions are to be respected