General Notes:

Do not scale dimensions from this drawing, unless for Planning purposes.

The Contractor is responsible for checking all dimensions on site prior to commencement of the works.

This drawing is to be read in conjuction with the specification.

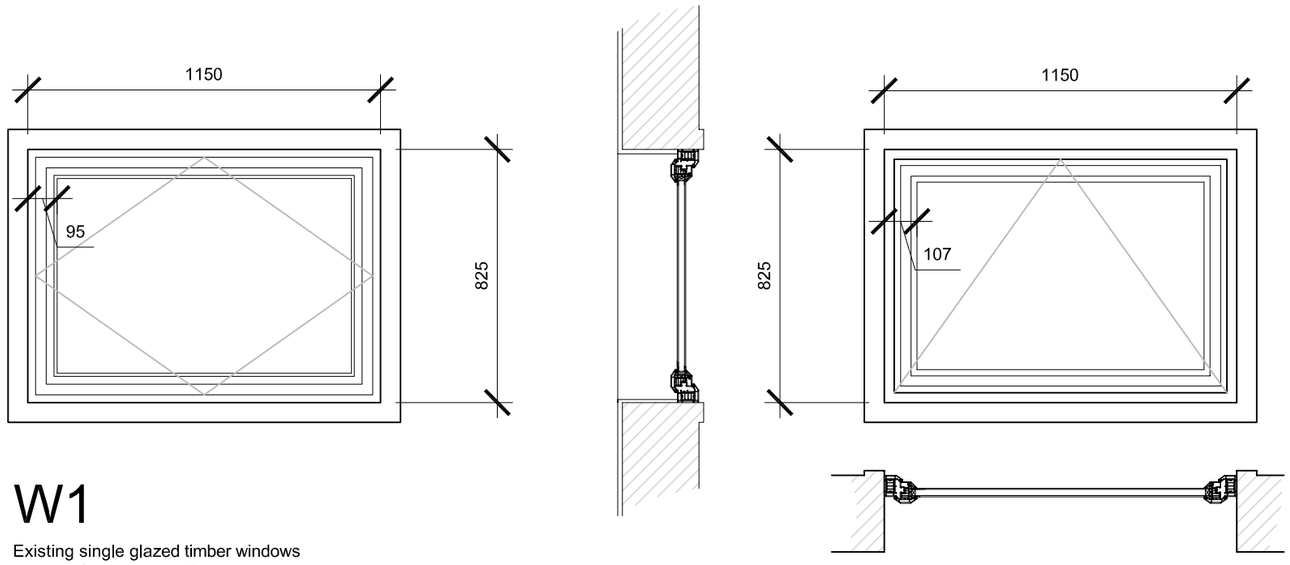

W1

Existing single glazed timber windows to be replaced with PVC

Proposed top hung PVC casement window.

1:20

400mm 0 400mm 800mm 1200mm 1600mm 2000mm

A 27/08/2024 SCALE BAR

Brian Elstone Surveying Services Ltd
Brian Elstone, MCIOB, MCABE
Building Surveyor and Architectural Consultant

1 Herne Court, Station Road, Rustington,
West Sussex, BN16 3BQ
Phone: 01903 784884, Mobile: 07710 593021.
Email: brian@elstone.biz

Client:
Ms C. Gilder, 11 Llandaff Court, Downview Road, Worthing, BN11 4QU

Project:
Replace Kitchen Window

Drawing Title:
Existing and Proposed window

Revision	Date	Description

Scale:	Date:	Drawn By:
1:20	19/08/2024	BE

Drawing Number:	Revision:
1665/002	A