Summary Drainage Consultation **Nov 30th 2020**

AWDM/1119/19 53-55 Southview Road & Land West of 51 to 63 Southview Road, Southwick, West Sussex

- ***GTA Civils and Transport*** are civil engineering consultants engaged by applicant to provide supporting information regarding drainage and highways on this project.

- ***Laura Gibbons*** Drainage engineer Adur District Council

Timeline

- 18.07.20 Supporting Information was submitted with the application. *SuDS Drainage Statement incorporating proposal drawings.*

- 05.11.19 New ADC drainage engineer finally provided a list of specific concerns on including requesting further testing to be carried out to end March 2020.

- 07.11.19 Testing commissioned by applicant to run to end of March 2020.

- 13.11.19 Informed of LPA committee report being written up with Reason for refusal included as below.

  Requested extended application process time to process requested and commissioned information
  Denied by LPA.

- 10.12.19 Planning Decision _ refusal including reason below.

01. The application fails to demonstrate that flooding of the site will not occur and that the development will not exacerbate flooding beyond the site. It is therefore contrary to policies 35 and 36 of the Adur Local Plan and the National Planning Policy Framework.

Post decision

- 02.04.20 Test results issued by Ashdown Soil Investigations

- 20.04.20 Revised proposals submitted to Adur District Council Drainage engineers for consideration

- April _ September 20 scheme revisions in consultation with ADC drainage engineer

- 02.10.20 Agreement reached 2.10.20 with Laura Gibbons based on drawings / reports

    - 7346/100/J DRAINAGE STRATEGY
    - 7346/101/D OVERLAND FLOW ROUTES

    - SuDS Drainage Statement
      51-63 Southview Road, Southwick, BN42 4TS (eighth issue 22.10.20)

    - Drainage Maintenance & Management Plan
      51-63 Southview Road, Southwick, BN42 4TS (third issue 22.10.20)

Following bound documents

Email agreement of proposals
Agreed drawings and reports as above.

From: Laura Gibbons <[redacted]>
Sent: Friday, October 2, 2020 3:19 PM
To: Martin Roberts <[redacted]>
Cc: Paul Calland <[redacted]>; Russell Ashby <[redacted]>; richard@circle25.co.uk; John Roberts <[redacted]>; John Pakenham <[redacted]>
Subject: Re: Southview Road, Southwick

Hi Martin,

That's fine. As stated previously I will request that some conditions are supplied to secure the details.

Thanks,

On Tue, 29 Sep 2020 at 08:50, Martin Roberts <[redacted]> wrote:

Morning Laura,

I've adjusted the paragraph in question as below – hopefully that's now OK for approval please?

> Please find attached revised 1 in 1000 year calculations with permeable paving capped at 570mm. You will see there is minor flooding of 19.7m/cubed which in reality would sit within the void space between blocks and tarmac base course and grit bedding. The total road area is 480sqm, so 19.7m/cubed would equate to 40mm of water either sitting on the surface or within the upper layers. Even if a small amount overflowed it would sit in the depressions in the landscaped area.

Kind regards,

Martin Roberts

Managing Director

GTA Civils & Transport Ltd

DD [redacted]

From: Laura Gibbons <[redacted]>
Sent: 25 September 2020 08:24
To: Martin Roberts <[redacted]>
Cc: Paul Calland <[redacted]>; Russell Ashby <[redacted]>; [redacted]; John Roberts <[redacted]>; John Pakenham <[redacted]>
Subject: Re: Southview Road, Southwick

Hi Martin,

Thanks for supplying this. This looks fine. The only comment I have is that there is a misinterpretation of the MicroDrainage results with the flooded volume read off wrong. The calculations show 2l/s outflow, and 19m3 of flooded volume. Please adjust the paragraph accordingly within your statement to reflect this and what you anticipate flooded depths would be.

Kind regards,

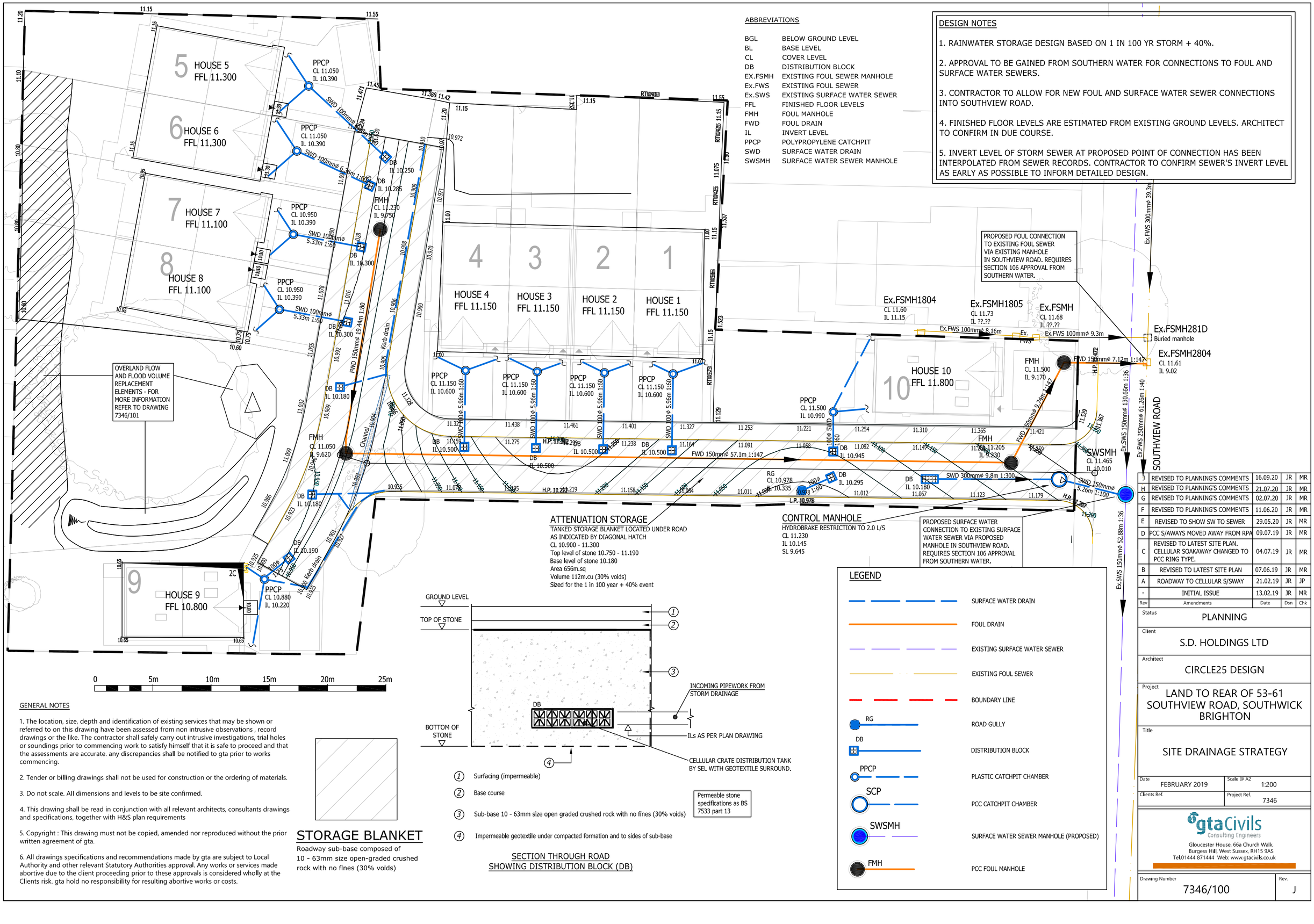

ABBREVIATIONS

BGL	BELOW GROUND LEVEL
BL	BASE LEVEL
CL	COVER LEVEL
DB	DISTRIBUTION BLOCK
EX.FSMH	EXISTING FOUL SEWER MANHOLE
Ex.FWS	EXISTING FOUL SEWER
Ex.SWS	EXISTING SURFACE WATER SEWER
FFL	FINISHED FLOOR LEVELS
FMH	FOUL MANHOLE
FWD	FOUL DRAIN
IL	INVERT LEVEL
PPCP	POLYPROPYLENE CATCHPIT
SWD	SURFACE WATER DRAIN
SWSMH	SURFACE WATER SEWER MANHOLE

DESIGN NOTES

1. RAINWATER STORAGE DESIGN BASED ON 1 IN 100 YR STORM + 40%.

2. APPROVAL TO BE GAINED FROM SOUTHERN WATER FOR CONNECTIONS TO FOUL AND SURFACE WATER SEWERS.

3. CONTRACTOR TO ALLOW FOR NEW FOUL AND SURFACE WATER SEWER CONNECTIONS INTO SOUTHVIEW ROAD.

4. FINISHED FLOOR LEVELS ARE ESTIMATED FROM EXISTING GROUND LEVELS. ARCHITECT TO CONFIRM IN DUE COURSE.

5. INVERT LEVEL OF STORM SEWER AT PROPOSED POINT OF CONNECTION HAS BEEN INTERPOLATED FROM SEWER RECORDS. CONTRACTOR TO CONFIRM SEWER'S INVERT LEVEL AS EARLY AS POSSIBLE TO INFORM DETAILED DESIGN.

ATTENUATION STORAGE

TANKED STORAGE BLANKET LOCATED UNDER ROAD AS INDICATED BY DIAGONAL HATCH
CL 10.900 - 11.300
Top level of stone 10.750 - 11.190
Base level of stone 10.180
Area 656m.sq
Volume 112m.cu (30% voids)
Sized for the 1 in 100 year + 40% event

CONTROL MANHOLE

HYDROBRAKE RESTRICTION TO 2.0 L/S
CL 11.230
IL 10.145
SL 9.645

1. Surfacing (impermeable)
2. Base course
3. Sub-base 10 - 63mm size open graded crushed rock with no fines (30% voids)
4. Impermeable geotextile under compacted formation and to sides of sub-base

Permeable stone specifications as BS 7533 part 13

SECTION THROUGH ROAD
SHOWING DISTRIBUTION BLOCK (DB)

STORAGE BLANKET

Roadway sub-base composed of
10 - 63mm size open-graded crushed rock with no fines (30% voids)

LEGEND

- SURFACE WATER DRAIN
- FOUL DRAIN
- EXISTING SURFACE WATER SEWER
- EXISTING FOUL SEWER
- BOUNDARY LINE
- RG — ROAD GULLY
- DB — DISTRIBUTION BLOCK
- PPCP — PLASTIC CATCHPIT CHAMBER
- SCP — PCC CATCHPIT CHAMBER
- SWSMH — SURFACE WATER SEWER MANHOLE (PROPOSED)
- FMH — PCC FOUL MANHOLE

GENERAL NOTES

1. The location, size, depth and identification of existing services that may be shown or referred to on this drawing have been assessed from non intrusive observations , record drawings or the like. The contractor shall safely carry out intrusive investigations, trial holes or soundings prior to commencing work to satisfy himself that it is safe to proceed and that the assessments are accurate. any discrepancies shall be notified to gta prior to works commencing.

2. Tender or billing drawings shall not be used for construction or the ordering of materials.

3. Do not scale. All dimensions and levels to be site confirmed.

4. This drawing shall be read in conjunction with all relevant architects, consultants drawings and specifications, together with H&S plan requirements

5. Copyright : This drawing must not be copied, amended nor reproduced without the prior written agreement of gta.

6. All drawings specifications and recommendations made by gta are subject to Local Authority and other relevant Statutory Authorities approval. Any works or services made abortive due to the client proceeding prior to these approvals is considered wholly at the Clients risk. gta hold no responsibility for resulting abortive works or costs.

Rev	Amendments	Date	Dsn	Chk
J	REVISED TO PLANNING'S COMMENTS	16.09.20	JR	MR
H	REVISED TO PLANNING'S COMMENTS	21.07.20	JR	MR
G	REVISED TO PLANNING'S COMMENTS	02.07.20	JR	MR
F	REVISED TO PLANNING'S COMMENTS	11.06.20	JR	MR
E	REVISED TO SHOW SW TO SEWER	29.05.20	JR	MR
D	PCC S/AWAYS MOVED AWAY FROM RPA	09.07.19	JR	MR
C	REVISED TO LATEST SITE PLAN. CELLULAR SOAKAWAY CHANGED TO PCC RING TYPE.	04.07.19	JR	MR
B	REVISED TO LATEST SITE PLAN	07.06.19	JR	MR
A	ROADWAY TO CELLULAR S/SWAY	21.02.19	JR	JP
-	INITIAL ISSUE	13.02.19	JR	MR

Status: PLANNING

Client: S.D. HOLDINGS LTD

Architect: CIRCLE25 DESIGN

Project: LAND TO REAR OF 53-61 SOUTHVIEW ROAD, SOUTHWICK BRIGHTON

Title: SITE DRAINAGE STRATEGY

Date: FEBRUARY 2019
Scale @ A2: 1:200
Clients Ref.:
Project Ref.: 7346

gtaCivils Consulting Engineers
Gloucester House, 66a Church Walk,
Burgess Hill, West Sussex, RH15 9AS
Tel.01444 871444 Web: www.gtacivils.co.uk

Drawing Number: 7346/100
Rev.: J

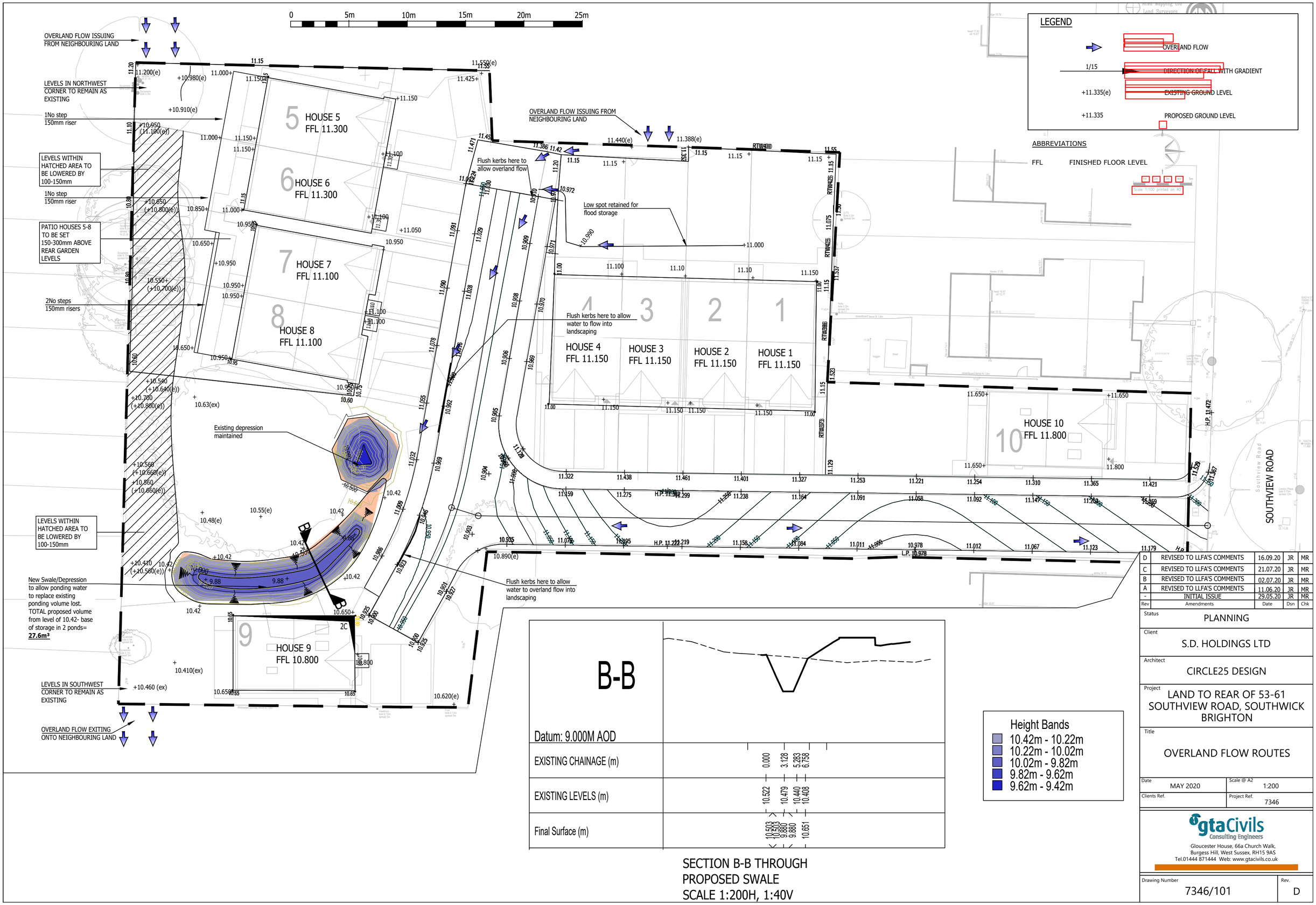

B-B

Datum: 9.000M AOD

EXISTING CHAINAGE (m)	0.000 3.128 5.283 6.758
EXISTING LEVELS (m)	10.522 10.479 10.440 10.408
Final Surface (m)	10.503 10.533 9.880 9.880 10.651

SECTION B-B THROUGH PROPOSED SWALE
SCALE 1:200H, 1:40V

Height Bands
- 10.42m - 10.22m
- 10.22m - 10.02m
- 10.02m - 9.82m
- 9.82m - 9.62m
- 9.62m - 9.42m

Rev	Amendments	Date	Dsn	Chk
D	REVISED TO LLFA'S COMMENTS	16.09.20	JR	MR
C	REVISED TO LLFA'S COMMENTS	21.07.20	JR	MR
B	REVISED TO LLFA'S COMMENTS	02.07.20	JR	MR
A	REVISED TO LLFA'S COMMENTS	11.06.20	JR	MR
-	INITIAL ISSUE	29.05.20	JR	MR

Status: PLANNING

Client: S.D. HOLDINGS LTD

Architect: CIRCLE25 DESIGN

Project: LAND TO REAR OF 53-61 SOUTHVIEW ROAD, SOUTHWICK BRIGHTON

Title: OVERLAND FLOW ROUTES

Date: MAY 2020 | Scale @ A2: 1:200

Clients Ref. | Project Ref.: 7346

gtaCivils Consulting Engineers
Gloucester House, 66a Church Walk,
Burgess Hill, West Sussex, RH15 9AS
Tel.01444 871444 Web: www.gtacivils.co.uk

Drawing Number: 7346/101 | Rev.: D

Drainage Maintenance & Management Plan

51-63 Southview Road, Southwick, BN42 4TS

Client

S.D. Holdings Ltd
4A Southview Road
Southwick
West Sussex BN42 4TU

Ref: 7346
Date: July 2020

Consulting Engineers

GTA Civils Ltd
Gloucester House
66a Church Walk
Burgess Hill
West Sussex RH15 9AS

Tel: 01444 871444

Index

1	Introduction	2
2	Maintenance Responsibilities	2
3	Management of Spillage	2
4	Surface Water Drainage - Catchpits & Gullies	3
5	Surface Water Drainage - Pipes, Chambers and Outfalls	3
6	Foul Drainage	4
7	Flow Control Device (Hydro-Brake)	4

Schedule of Appendices

A Site Drainage Plan

Issue	Issue date	Compiled	Checked
Preliminary/First Issue	02 July 2020	JR	MR
Second Issue	22 July 2020	JR	MR
Third issue	22 October 2020	JR	MR

1 Introduction

1.1 This Drainage Maintenance & Management Plan has been prepared for S.D. Holdings Ltd. in conjunction with the proposed development at 51-63 Southview Road, Southwick BN42 4TS.

1.2 The Site Drainage plan to which this document refers is contained in Appendix A.

1.3 No responsibility is accepted to any third party for all or part of this study in connection with this or any other development.

2 Maintenance Responsibilities

2.1 The maintenance responsibilities within this report relate to the shared private drainage only. These comprise a) any drainage installed under the shared roadway and b) drainage serving more than one property at any location, i.e. within shared roadway or private areas.

2.2 The maintenance requirements for the shared private drainage elements will be contracted out to an Estate Management company.

2.3 The Estate Management Company will seek half-yearly financial contributions (in the form of service charges) from the leaseholders/owners of the development to include for the regular costs of the maintenance of the site drainage. A separate sinking fund will be maintained to provide for the anticipated replacement cost of the major components at the end of the manufacturer's design life and regular maintenance costs in the unlikely event of the Estate Management Company (or any subsequent Estate Management Company) being no longer able to fulfil its duties. These funds are to be held in bank client accounts kept separate from the bank account of the Estate Management Company.

3 Management of Spillage

3.1 The Environment Agency would prefer all spillages on any vehicular surface to be contained to prevent any downstream contamination. However, this cannot always be achieved, depending on the nature of the spillage. In all circumstances involving the spillage of substances on a roadway, it is important that the Environment Agency is notified as soon as possible so that they can provide advice and take appropriate action.

3.2 Prompt action following a spillage can prevent or reduce its effects, whilst inappropriate action may cause or worsen the pollution effects.

3.3 In the event of a spillage on the shared vehicular surface, it is the responsibility of the Property Maintenance company's staff to clear up any spillage before it enters the drainage system. The primary method of dealing with any spillage of hydrocarbons should be to use sand to soak up the leak and prevent any hydrocarbons entering the drainage system. Once sand has been contaminated it should not be washed into the drainage system but disposed of by a Licensed Contractor.

4 Surface Water Drainage - Catchpits & Gullies

Schedule	Action	Frequency
Regular Maintenance	Inspect and identify any areas that are not operating correctly. If required, take remedial action.	6 Monthly intervals.
	Common hardstanding areas to be swept clear of debris, to prevent possibility of blockages to the receiving drainage systems.	Weekly.
	Debris removal from gullies & silt pits (where may cause risks to performance).	6 Monthly intervals, after autumn leaf fall, or as required based on specific observations.
	Lift and inspect receiving manholes to check for any blockages.	Monthly.
Remedial Actions	Repair any damaged gully gratings or silt pit covers.	As required.

5 Surface Water Drainage - Pipes, Chambers and Outfalls

5.1 Inspection frequency: annually.

5.2 Maintenance Requirements: Carry out visual check of all inspection chambers, manholes and the outfall to ensure all pipes are clear and free flowing. If not, clean out by rodding or jetting.

5.3 Maintenance: A CCTV Drainage Survey should be completed every 10 Years and any of blockage/waste build up should be jet washed or removed by a Licensed Effluent Disposal Contractor.

6 Foul Drainage

6.1 Inspection frequency: annually.

6.2 Maintenance Requirements: Visual inspection of chambers & manholes is to be completed on a 5-yearly basis and any signs of blockage / waste build up should be jet washed or removed by a Licensed Effluent Disposal Contractor.

6.3 A CCTV Drainage Survey should be completed every 10 Years and any of blockage/waste build up should be jet washed or removed by a Licensed Effluent Disposal Contractor.

7 Flow Control Device (Hydro-Brake)

7.1 Little maintenance is usually required as there are no moving parts within the Hydro-Brake flow control. If blockages occur, they may do so at the intake.

7.2 Following installation of the Hydro-Brake flow control it is vitally important that any extraneous material i.e. building materials are removed from the unit and the chamber. After the system is made live, it is recommended that the unit be inspected monthly for three months and thereafter at six monthly intervals with hose down if required.

7.3 All Hydro-Brake flow control units are typically manufactured from grade 304 Stainless Steel, and if required they can also be manufactured in grade 316 Stainless Steel. Both materials have an estimated life span in excess of the design life of drainage systems.

7.4 The maintenance frequencies set out in Section 4.0 shall be carried out. This will help prevent future blockages. The silt sump of the control manhole shall be treated in the same way as silt/catchpits in the table above.

7.1 The flow control device's bypass door shall be inspected every year and greased / replaced as necessary.

- End of Plan -

Appendix

Site Drainage Plan

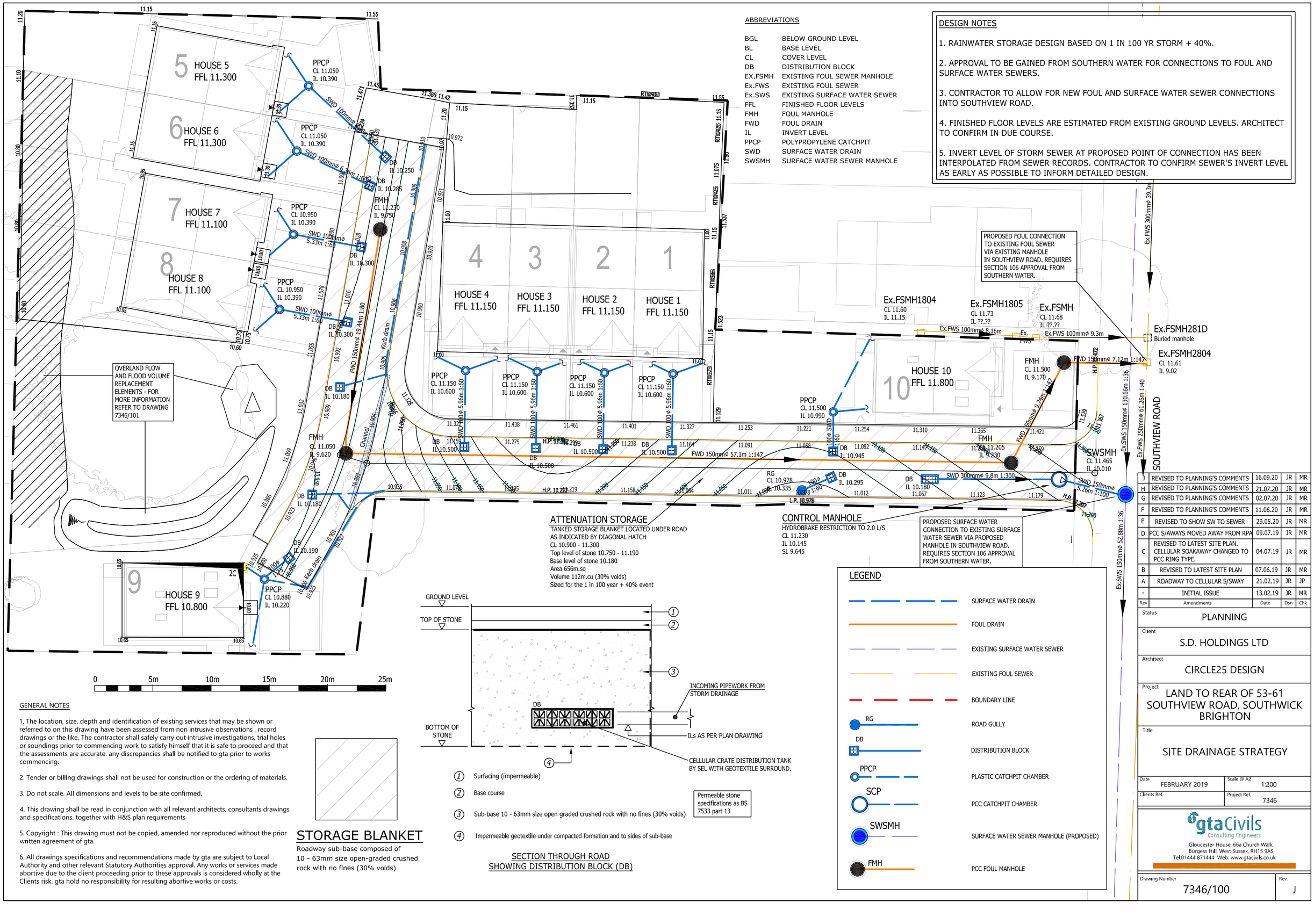

ABBREVIATIONS

BGL	BELOW GROUND LEVEL
BL	BASE LEVEL
CL	COVER LEVEL
DB	DISTRIBUTION BLOCK
EX.FSMH	EXISTING FOUL SEWER MANHOLE
Ex.FWS	EXISTING FOUL SEWER
Ex.SWS	EXISTING SURFACE WATER SEWER
FFL	FINISHED FLOOR LEVELS
FMH	FOUL MANHOLE
FWD	FOUL DRAIN
IL	INVERT LEVEL
PPCP	POLYPROPYLENE CATCHPIT
SWD	SURFACE WATER DRAIN
SWSMH	SURFACE WATER SEWER MANHOLE

DESIGN NOTES

1. RAINWATER STORAGE DESIGN BASED ON 1 IN 100 YR STORM + 40%.

2. APPROVAL TO BE GAINED FROM SOUTHERN WATER FOR CONNECTIONS TO FOUL AND SURFACE WATER SEWERS.

3. CONTRACTOR TO ALLOW FOR NEW FOUL AND SURFACE WATER SEWER CONNECTIONS INTO SOUTHVIEW ROAD.

4. FINISHED FLOOR LEVELS ARE ESTIMATED FROM EXISTING GROUND LEVELS. ARCHITECT TO CONFIRM IN DUE COURSE.

5. INVERT LEVEL OF STORM SEWER AT PROPOSED POINT OF CONNECTION HAS BEEN INTERPOLATED FROM SEWER RECORDS. CONTRACTOR TO CONFIRM SEWER'S INVERT LEVEL AS EARLY AS POSSIBLE TO INFORM DETAILED DESIGN.

ATTENUATION STORAGE

TANKED STORAGE BLANKET LOCATED UNDER ROAD AS INDICATED BY DIAGONAL HATCH
CL 10.900 - 11.300
Top level of stone 10.750 - 11.190
Base level of stone 10.180
Area 656m.sq
Volume 112m.cu (30% voids)
Sized for the 1 in 100 year + 40% event

CONTROL MANHOLE

HYDROBRAKE RESTRICTION TO 2.0 L/S
CL 11.230
IL 10.145
SL 9.645

1. Surfacing (impermeable)
2. Base course
3. Sub-base 10 - 63mm size open graded crushed rock with no fines (30% voids)
4. Impermeable geotextile under compacted formation and to sides of sub-base

Permeable stone specifications as BS 7533 part 13

SECTION THROUGH ROAD
SHOWING DISTRIBUTION BLOCK (DB)

STORAGE BLANKET

Roadway sub-base composed of
10 - 63mm size open-graded crushed rock with no fines (30% voids)

LEGEND

- SURFACE WATER DRAIN
- FOUL DRAIN
- EXISTING SURFACE WATER SEWER
- EXISTING FOUL SEWER
- BOUNDARY LINE
- RG — ROAD GULLY
- DB — DISTRIBUTION BLOCK
- PPCP — PLASTIC CATCHPIT CHAMBER
- SCP — PCC CATCHPIT CHAMBER
- SWSMH — SURFACE WATER SEWER MANHOLE (PROPOSED)
- FMH — PCC FOUL MANHOLE

GENERAL NOTES

1. The location, size, depth and identification of existing services that may be shown or referred to on this drawing have been assessed from non intrusive observations , record drawings or the like. The contractor shall safely carry out intrusive investigations, trial holes or soundings prior to commencing work to satisfy himself that it is safe to proceed and that the assessments are accurate. any discrepancies shall be notified to gta prior to works commencing.

2. Tender or billing drawings shall not be used for construction or the ordering of materials.

3. Do not scale. All dimensions and levels to be site confirmed.

4. This drawing shall be read in conjunction with all relevant architects, consultants drawings and specifications, together with H&S plan requirements

5. Copyright : This drawing must not be copied, amended nor reproduced without the prior written agreement of gta.

6. All drawings specifications and recommendations made by gta are subject to Local Authority and other relevant Statutory Authorities approval. Any works or services made abortive due to the client proceeding prior to these approvals is considered wholly at the Clients risk. gta hold no responsibility for resulting abortive works or costs.

Rev	Amendments	Date	Dsn	Chk
J	REVISED TO PLANNING'S COMMENTS	16.09.20	JR	MR
H	REVISED TO PLANNING'S COMMENTS	21.07.20	JR	MR
G	REVISED TO PLANNING'S COMMENTS	02.07.20	JR	MR
F	REVISED TO PLANNING'S COMMENTS	11.06.20	JR	MR
E	REVISED TO SHOW SW TO SEWER	29.05.20	JR	MR
D	PCC S/AWAYS MOVED AWAY FROM RPA	09.07.19	JR	MR
C	REVISED TO LATEST SITE PLAN. CELLULAR SOAKAWAY CHANGED TO PCC RING TYPE.	04.07.19	JR	MR
B	REVISED TO LATEST SITE PLAN	07.06.19	JR	MR
A	ROADWAY TO CELLULAR S/SWAY	21.02.19	JR	JP
-	INITIAL ISSUE	13.02.19	JR	MR

Status: PLANNING

Client: S.D. HOLDINGS LTD

Architect: CIRCLE25 DESIGN

Project: LAND TO REAR OF 53-61 SOUTHVIEW ROAD, SOUTHWICK BRIGHTON

Title: SITE DRAINAGE STRATEGY

Date: FEBRUARY 2019
Scale @ A2: 1:200
Clients Ref.:
Project Ref.: 7346

gtaCivils Consulting Engineers
Gloucester House, 66a Church Walk,
Burgess Hill, West Sussex, RH15 9AS
Tel.01444 871444 Web: www.gtacivils.co.uk

Drawing Number: 7346/100
Rev.: J

SuDS Drainage Statement

51-63 Southview Road, Southwick, BN42 4TS

Client

S.D. Holdings Ltd
4A Southview Road
Southwick
West Sussex BN42 4TU

Ref: 7346
Date: February 2019

Consulting Engineers

GTA Civils Ltd
Gloucester House
66a Church Walk
Burgess Hill
West Sussex RH15 9AS

Tel: 01444 871444

Index

1	Introduction & Site Description	2
2	Proposed Site	4
3	Surface Water Drainage	4

Schedule of Appendices

A Site Location Map and Photographs of the Site

B Topographic Survey & Sewer Records

C Proposed Scheme Drawings Including Drainage Strategy

D Micro Drainage Calculations

E Site Investigation (Winter BRE365 Soakage Testing and Groundwater Monitoring)

F Southern Water Correspondence

Issue	Issue date	Compiled	Checked
Preliminary Issue	13 February 2019	JP	MR
2nd Preliminary/First Issue	21 February 2019	JP	MR
Second Issue	24 June 2019	JP	MR
Third Issue	05 July 2019	JP	MR
Fourth Issue	29 May 2020	JP	MR
Fifth Issue	12 June 2020	JP	MR
Sixth Issue	02 July 2020	JP	MR
Seventh Issue	22 July 2020	JP	MR
Eighth Issue	22 October 2020	JP	MR

1 Introduction & Site Description

1.1 This SuDS Drainage Statement has been prepared for S.D. Holdings Ltd. in conjunction with the proposed development at 51-63 Southview Road, Southwick BN42 4TS. No responsibility is accepted to any third party for all or part of this study in connection with this or any other development.

1.2 This statement has been amended following winter groundwater monitoring and a planning refusal. Due to the high water table level, the development's surface water will be routed to Southern Water's public sewer in Southwick Road. Southern Water has agreed to the maximum proposed discharge rate of 2.0l/s.

1.3 The application site lies in Southwick, which is administered by Adur and Worthing Councils (AWC). it comprises vacant garden space to the rear of dwellings along Southview Road. A site location map and aerial view are shown in Appendix A.

1.4 Topography: A topographical survey is shown in Appendix B. The site's levels range between approximately 11.7m AOD and 10.2m AOD. As the site is soft landscaped it is 100% permeable. The site area is approximately 2693m^2.

1.5 Geology: The BGS online map shows this area's bedrock is Tarrant Chalk. This is overlain by superficial deposits of Head (clay, silt, sand and gravel). Head has a notoriously low permeability, whilst the Chalk is likely to offer at least reasonable, if not good, porosity.

1.6 Surface water flooding: This site is affected by 2 overland flow routes that enter the site from higher land to the north and northwest.

1.7 It is considered likely that there will be porosity at depth for infiltration structures such as porous pavings, infiltration trenches/blankets etc. The Head, which has a high proportion of cohesive soil particles (which limits the porosity) acts as an impervious 'capping layer'. This is what is causing the LLFA drainage engineers to warn of the 'groundwater flooding problem' (in the pre-app letter).

1.8 A Site Investigation was carried out to determine the water table level, soil types down to 6m below ground level and soil soakage rates. The boreholes show the upper level of Head being mostly clay, while the lower level being mostly sand (sized particles).

1.9 Soakage tests were carried out in accordance with BRE365. Appendix E contains the test results and borehole records. The lowest soakage rate is 7.6 x 10^{-6}m/s.

1.10 Winter groundwater monitoring was undertaken between 09/11/19 and 03/04/20. The water table rose from 5.5m bgl to the surface on 24 January '20 and stayed there until the end of March. The data logger graph is in Appendix E. It is clear from this result that soakage is not a viable option, therefore.

1.11 Public Sewers: Southern Water's sewer records (in Appendix B) show both foul and storm water public sewers in Southview Road. The depth of the surface water sewer below ground level at both the manholes upstream and downstream of the site is approximately 1.5m.

1.12 A pre-application capacity check was sent in to Southern Water's. Agreement to discharge into the sewer at a maximum rate of 2.0l/s was sought and subsequently confirmed as acceptable.

1.13 The EA's Groundwater Source Protection Zones map show the site being removed from the nearest zone. The site overlies a Major Aquifer – High, according to Groundwater Vulnerability Zones map, however – as to be expected considering the Tarrant Chalk stratum (at depth).

1.14 The EA's surface water flood maps show that this site is liable to flood in the 1 in 100 years and 1 in 1000 years storm.

2 Proposed Site & Surface Water Drainage

2.1 The proposal is to build 10 new dwelling units. The existing and proposed site plans are shown in Appendix C.

2.2 Proposed surface water drainage: SuDS (Sustainable Drainage Systems) Policy states that surface water runoff for use must be discharged according to the following hierarchy:

- Infiltration to ground;
- Discharge to a surface water body;
- Discharge to a surface water sewer, highway drain, or another drainage system;
- Discharge to a combined sewer where there are absolutely no other options, and only where agreed in advance with the relevant sewerage undertaker.

2.3 The SuDS Hierarchy (infiltration, watercourses, public sewers, private sewers) was considered. The winter groundwater monitoring and soakage tests undertaken, see sections 1.9 and 1.10 above. Due to the high water table level, it is concluded that infiltration is not a viable option here.

2.4 The development's surface water will be routed to Southern Water's public sewer in Southview Road. A capacity check from Southern Water indicates that a maximum offsite runoff rate of 2.0l/s (in the critical 1% + 40% climate change event) is acceptable – see Appendix F.

2.5 The sub-base of the (impermeable) road will act as a tank - as coarse granular fill has a voids ratio of 0.3. This will be lined to stop any rising groundwater from percolating into the SuDS network's storage volume.

2.6 The sub-base's volume (see the drainage strategy layout in Appendix C) has been calculated for the critical '1 in 100 years plus 40% climate change' storm. The calculation sheets are shown in Appendix D.

2.7 The overland flow route to the west of the site will be routed in a shallow depression to the area around the tree next to unit #8. One of the natural pond areas will be filled in and the equivalent volume transferred to a new area to the east, between the tree and road.

2.8 The overland flow route that bisects the site occurs only in the extreme (1 in 1000 years) storm. This will be routed across the road to the pond area. Any volume that overtops this will flow, much as it does currently southwards to the coast. The flow across the (almost planar) road would fan out wide and its depth is estimated as <50mm. Basis: the shallow and narrow overland flow route in the EA's flood map would be – in the post-development layout – no

narrower and therefore no deeper. This flow route has been superimposed on to the topographic survey below. This is the narrowest – and therefore deepest area of flow, at the south boundary. The difference in level between these spot levels is 50mm deep at the edges, making the depth less than this, estimated at 25mm – 30mm:

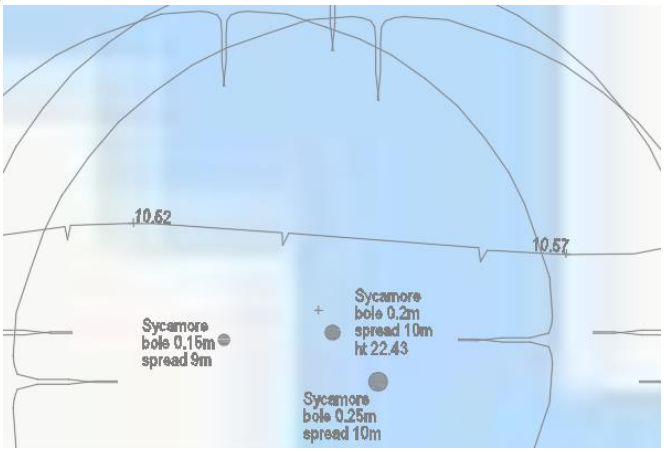

2.9 The width of this flow route is 3.3m. The flow route across the proposed road would be also approximately 3m – 3.3m wide, so the maximum depth would be 25mm – 35mm deep.

2.10 There will be no increase in flood risk to neighbouring sites as a result of this proposal. The combination of porous sub-base and pond volume provides a significant betterment in the attenuation characteristics. The controlled offsite flow rate from the roofed areas (into the public sewer) will also decrease the *overall* volume of water that will flow off this site *overland* in all the main storm events, ie 1 in 1 year, 30 years and 100 years + CC. Currently all the water flowing into this site, whether from higher land or the sky, finds its way to ground or off site to the south. Only a small proportion of this volume will flow to neighbouring land, *if any*. The combination of a controlled flow rate into the sewer (that has *confirmed capacity* for the 2l/s rate) - and SuDS storage volume with restricted flow rate - improves the flood risk of the downstream properties.

2.11 The water will be treated by the sub-base granular fill. The filtration qualities of coarse fill are excellent and, in this way, the quality - cleanliness - of water as it joins the sewer will be high. Table 26.2 of CIRIA's SuDS Manual shows that residential developments have pollution hazard indices as follows (overleaf):

Land use	Pollution hazard level	Total suspended solids (TSS)	Metals	Hydro-carbons
Residential roofs	Very low	0.2	0.2	0.05
Other roofs (typically commercial/ industrial roofs)	Low	0.3	0.2 (up to 0.8 where there is potential for metals to leach from the roof)	0.05
Individual property driveways, residential car parks, low traffic roads (eg cul de sacs, homezones and general access roads) and non-residential car parking with infrequent change (eg schools, offices) ie < 300 traffic movements/day	Low	0.5	0.4	0.4

The TSS index for a private dwelling with a drive is 0.2 + 0.5 = 0.7, the metals index is 0.2 + 0.4 = 0.6 and the hydrocarbons index is 0.05 + 0.4 = 0.45.

2.12 Table 26.3 of CIRIA's SuDS Manual shows that permeable pavements have pollution hazard indices as follows, namely 0.7, 0.6 and 0.7 for each of the 3 categories:

TABLE 26.3 Indicative SuDS mitigation indices for discharges to surface waters

	Mitigation indices[1]		
Type of SuDS component	TSS	Metals	Hydrocarbons
Filter strip	0.4	0.4	0.5
Filter drain	0.4[2]	0.4	0.4
Swale	0.5	0.6	0.6
Bioretention system	0.8	0.8	0.8
Permeable pavement	0.7	0.6	0.7
Detention basin	0.5	0.5	0.6

Each of these equals or is higher than each respective pollution index – see section 2.11 above.

2.13 Maintenance of the SuDS system will be the overall responsibility of the Applicant. The reader is referred to GTA Civils and Transport's separate Drainage Maintenance & Management Plan, dated 01/07/20.

2.14 The Estate Management Company contracted to carry out this programme will seek half-yearly financial contributions (in the form of service charges) from the leaseholders/owners of the development to include for the regular costs of the maintenance of the site drainage. A separate sinking fund will be maintained to provide for the anticipated replacement cost of the major components at the end of the manufacturer's design life. These funds are to be held

in bank client accounts kept separate from the bank account of the Estate Management Company.

2.15 Exceedance flows: Appendix D shows the 1 in 1000 year calculation with permeable paving capped at 570mm. Although there is minor flooding of 19.7m^3, as the road area is 480m^2, 19.7m^3 would equate to 40mm of water either sitting on the surface or within the upper layers, ie the void space between blocks and tarmac base course and grit bedding. (Even if a small amount overflowed it would sit in the depressions in the landscaped area).

2.16 There are 2 overland flow routes passing through the site. These will be routed away from the units – as shown on the Overland Flow Routes layout drawing (101 rev D) in Appendix C.

2.17 The possible loss of floodplain volume has been mitigated by lowering the levels in a crescent swale to the north of unit 9. In addition the gardens to the north of units 1 – 4 will be lowered by 150mm. This will compensate for the lost storage flooding area (medium risk scenario) allowing unimpeded passage of flood water through these gardens. This principle was agreed at a meeting between GTA and the LLFA engineer.

2.18 The existing and proposed volumes summary table in drawing ref 7346/103A in Appendix C shows that, once all the 3 separate zones of storage are added up, each of the depth bands in the post-development scenario offer a significant increase than the current setup. Drawing 7346/101 rev D shows the proposed swale and blanket areas (shaded) and a section through the proposed swale – with a 5x vertical exaggeration. The 150mm flood storage area within the gardens is shown. This was agreed at the same meeting between the LLFA and GTA.

- End of Statement -

Appendix A

Site Location Map and Photographs of the Site

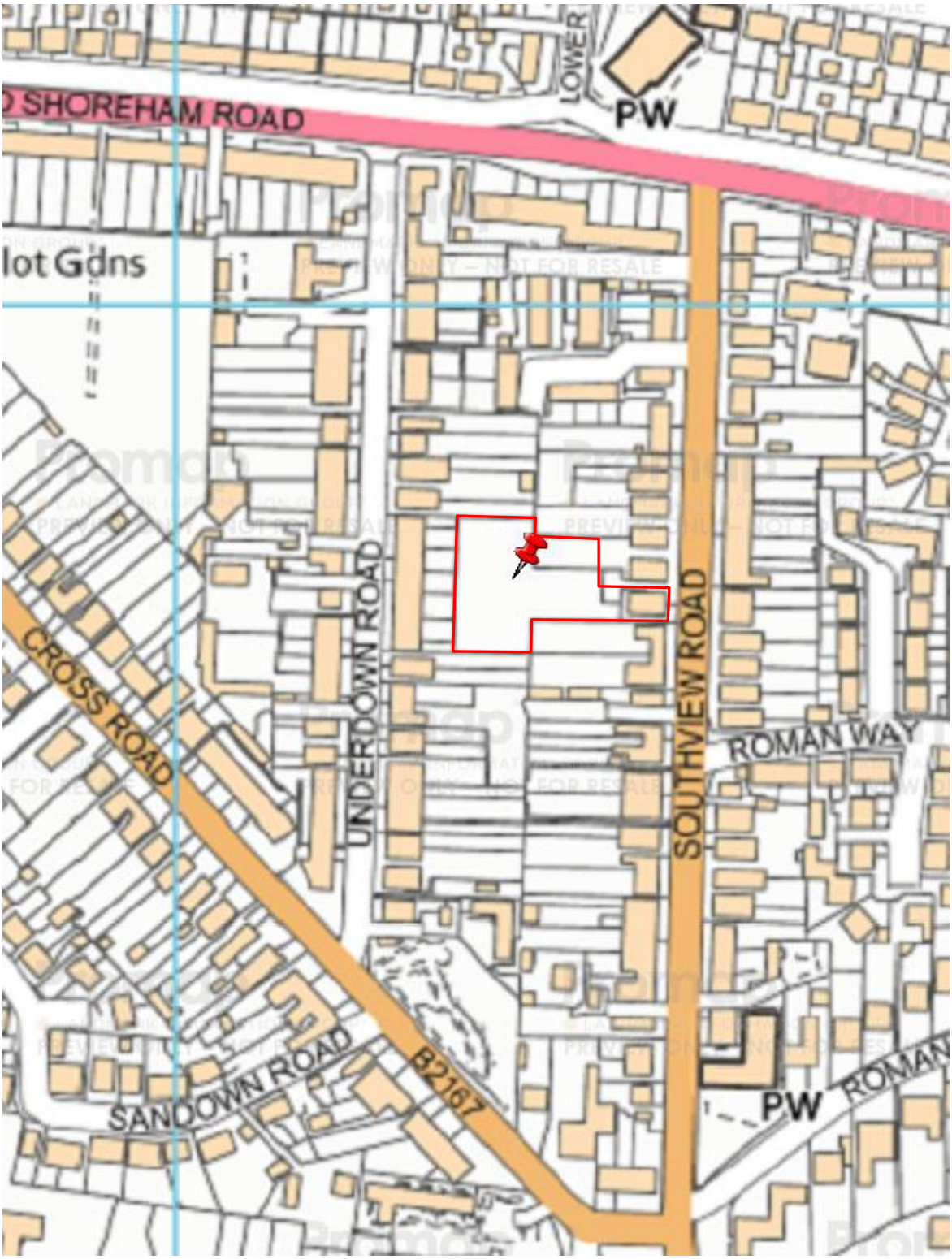


Site Location
S D Holdings
Cee Catering Equipment Engineers
Underdown Rd
Southview Rd
Dog Treats
mymacfixer
House Of Beauty
Cross Rd



View of site from west boundary looking east



View looking northwards along west boundary

Appendix B

Topographic Survey & Sewer Records

This drawing is confidential and must not be copied or disclosed without written consent © ACAD MAPPING

Do Not Scale

CLIENT
Circle 25 Design

PROJECT
Land At Southview Road
Southwick

TITLE
SITE SURVEY

SCALE	DATE	BY
1:100	24/04/17	MG
NUMBER	SHEET	REVN
M1131	1	–

Acad Mapping Ltd
Land Surveyors
Frenches Farm House
Mark Cross
East Sussex TN6 3NS
Telephone (01892) 853663
Fax (01892) 853828
e-mail info@acadmapping.com

ACAD MAPPING

Survey carried out using GPS to establish control stations combined with Total Station methods for detail & levels
Grid relates to Ordnance Survey National Grid

Species of trees must be confirmed by a qualified arboriculturist before any design work takes place

Spreads of trees shown as average

N

1m 2m 3m 4m 5m
Scale 1:100 printed on A0

scrub & bramble
lawn
tarmac drive
concrete
Shed
hoggin
No 51
closeboard fence ht 1.8m
chainlink fence ht 1.8m
chainlink fence ht 1.5m
post & wire fence ht 1.8m
dilapidated lanchap fence ht 1.8m
assumed boundary line
crease in terrain
brick footing
Sycamore bole 0.4m spread 11m
Sycamore bole 0.2m
Sycamore bole 0.5m spread 8m
Sycamore bole 0.2m spread 10m ht 23.56
Sycamore bole 0.15m spread 8m
Sycamore bole 0.15m spread 8m
Sycamore bole 0.2m spread 10m ht 23.56
Sycamore bole 0.15m spread 8m ht 21.42
Horse Chestnut bole 1.3m spread 18m ht 25.93
Horse Chestnut bole 0.7m spread 3m
Sycamore bole 0.1m spread 3m
Sycamore bole 0.15m spread 3m
Sycamore bole 0.2m spread 10m ht 24.97
Sycamore bole 0.15m spread 10m
Sycamore bole 0.5m spread 12m ht 27.06
Sycamore bole 0.35m spread 12m
Sycamore bole 0.2m spread 12m
Sycamore bole 0.35m spread 10m
Sycamore bole 0.2m spread 10m ht 22.43
Sycamore bole 0.20m spread 10m
Elder bole 0.35m spread 5m
Holly bole 0.2m spread 6m ht 19.11
Oak bole 0.35m spread 11m ht 23.25
Fruit bole 0.2m spread 5m
Fruit bole 0.15m spread 7m
Fruit bole 0.13m spread 3m
Fruit bole 0.13m spread 3m
Fruit bole 0.13m spread 3m
Hawthorn bole 0.15m spread 5m
Sycamore bole 0.35m spread 12m
Sycamore bole 0.15m spread 10m
Sycamore bole 0.35m spread 12m
Sycamore bole 0.35m spread 12m
BUTT Row 0.2m Spread 5m
524150.470 104672.580 11.869
A 10.56
wall for 12.54m
wall for 12.54m
524173.861 103950.239 11.918
524192.380 103954.340 12.025
524163.000 104000.000
524200.000 104000.000
524200.000 103950.000
524150.000 103950.000
524150.000 104000.000
104000.000N
103950.000N
103900.000N
103850.000N
103800.000N
103750.000N
103700.000N
103650.000N
103600.000N
103550.000N
103500.000N
103450.000N
103400.000N
103350.000N
103300.000N
103250.000N
103200.000N
103150.000N
103100.000N
103050.000N
103000.000N
102950.000N
102900.000N
102850.000N
102800.000N
102750.000N
102700.000N
102650.000N
102600.000N
102550.000N
102500.000N
102450.000N
102400.000N
102350.000N
102300.000N
102250.000N
102200.000N
102150.000N
102100.000N
102050.000N
102000.000N
101950.000N
101900.000N
101850.000N
101800.000N
101750.000N
101700.000N
101650.000N
101600.000N
101550.000N
101500.000N
101450.000N
101400.000N
101350.000N
101300.000N
101250.000N
101200.000N
101150.000N
101100.000N
101050.000N
101000.000N
100950.000N
100900.000N
100850.000N
100800.000N
100750.000N
100700.000N
100650.000N
100600.000N
100550.000N
100500.000N
100450.000N
100400.000N
100350.000N
100300.000N
100250.000N
100200.000N
100150.000N
100100.000N
100050.000N
100000.000N
99950.000N
99900.000N
99850.000N
99800.000N
99750.000N
99700.000N
99650.000N
99600.000N
99550.000N
99500.000N
99450.000N
99400.000N
99350.000N
99300.000N
99250.000N
99200.000N
99150.000N
99100.000N
99050.000N
99000.000N
98950.000N
98900.000N
98850.000N
98800.000N
98750.000N
98700.000N
98650.000N
98600.000N
98550.000N
98500.000N
98450.000N
98400.000N
98350.000N
98300.000N
98250.000N
98200.000N
98150.000N
98100.000N
98050.000N
98000.000N
97950.000N
97900.000N
97850.000N
97800.000N
97750.000N
97700.000N
97650.000N
97600.000N
97550.000N
97500.000N
97450.000N
97400.000N
97350.000N
97300.000N
97250.000N
97200.000N
97150.000N
97100.000N
97050.000N
97000.000N
96950.000N
96900.000N
96850.000N
96800.000N
96750.000N
96700.000N
96650.000N
96600.000N
96550.000N
96500.000N
96450.000N
96400.000N
96350.000N
96300.000N
96250.000N
96200.000N
96150.000N
96100.000N
96050.000N
96000.000N
95950.000N
95900.000N
95850.000N
95800.000N
95750.000N
95700.000N
95650.000N
95600.000N
95550.000N
95500.000N
95450.000N
95400.000N
95350.000N
95300.000N
95250.000N
95200.000N
95150.000N
95100.000N
95050.000N
95000.000N
94950.000N
94900.000N
94850.000N
94800.000N
94750.000N
94700.000N
94650.000N
94600.000N
94550.000N
94500.000N
94450.000N
94400.000N
94350.000N
94300.000N
94250.000N
94200.000N
94150.000N
94100.000N
94050.000N
94000.000N
93950.000N
93900.000N
93850.000N
93800.000N
93750.000N
93700.000N
93650.000N
93600.000N
93550.000N
93500.000N
93450.000N
93400.000N
93350.000N
93300.000N
93250.000N
93200.000N
93150.000N
93100.000N
93050.000N
93000.000N
92950.000N
92900.000N
92850.000N
92800.000N
92750.000N
92700.000N
92650.000N
92600.000N
92550.000N
92500.000N
92450.000N
92400.000N
92350.000N
92300.000N
92250.000N
92200.000N
92150.000N
92100.000N
92050.000N
92000.000N
91950.000N
91900.000N
91850.000N
91800.000N
91750.000N
91700.000N
91650.000N
91600.000N
91550.000N
91500.000N
91450.000N
91400.000N
91350.000N
91300.000N
91250.000N
91200.000N
91150.000N
91100.000N
91050.000N
91000.000N
90950.000N
90900.000N
90850.000N
90800.000N
90750.000N
90700.000N
90650.000N
90600.000N
90550.000N
90500.000N
90450.000N
90400.000N
90350.000N
90300.000N
90250.000N
90200.000N
90150.000N
90100.000N
90050.000N
90000.000N
89950.000N
89900.000N
89850.000N
89800.000N
89750.000N
89700.000N
89650.000N
89600.000N
89550.000N
89500.000N
89450.000N
89400.000N
89350.000N
89300.000N
89250.000N
89200.000N
89150.000N
89100.000N
89050.000N
89000.000N
88950.000N
88900.000N
88850.000N
88800.000N
88750.000N
88700.000N
88650.000N
88600.000N
88550.000N
88500.000N
88450.000N
88400.000N
88350.000N
88300.000N
88250.000N
88200.000N
88150.000N
88100.000N
88050.000N
88000.000N
87950.000N
87900.000N
87850.000N
87800.000N
87750.000N
87700.000N
87650.000N
87600.000N
87550.000N
87500.000N
87450.000N
87400.000N
87350.000N
87300.000N
87250.000N
87200.000N
87150.000N
87100.000N
87050.000N
87000.000N
86950.000N
86900.000N
86850.000N
86800.000N
86750.000N
86700.000N
86650.000N
86600.000N
86550.000N
86500.000N
86450.000N
86400.000N
86350.000N
86300.000N
86250.000N
86200.000N
86150.000N
86100.000N
86050.000N
86000.000N
85950.000N
85900.000N
85850.000N
85800.000N
85750.000N
85700.000N
85650.000N
85600.000N
85550.000N
85500.000N
85450.000N
85400.000N
85350.000N
85300.000N
85250.000N
85200.000N
85150.000N
85100.000N
85050.000N
85000.000N
84950.000N
84900.000N
84850.000N
84800.000N
84750.000N
84700.000N
84650.000N
84600.000N
84550.000N
84500.000N
84450.000N
84400.000N
84350.000N
84300.000N
84250.000N
84200.000N
84150.000N
84100.000N
84050.000N
84000.000N
83950.000N
83900.000N
83850.000N
83800.000N
83750.000N
83700.000N
83650.000N
83600.000N
83550.000N
83500.000N
83450.000N
83400.000N
83350.000N
83300.000N
83250.000N
83200.000N
83150.000N
83100.000N
83050.000N
83000.000N
82950.000N
82900.000N
82850.000N
82800.000N
82750.000N
82700.000N
82650.000N
82600.000N
82550.000N
82500.000N
82450.000N
82400.000N
82350.000N
82300.000N
82250.000N
82200.000N
82150.000N
82100.000N
82050.000N
82000.000N
81950.000N
81900.000N
81850.000N
81800.000N
81750.000N
81700.000N
81650.000N
81600.000N
81550.000N
81500.000N
81450.000N
81400.000N
81350.000N
81300.000N
81250.000N
81200.000N
81150.000N
81100.000N
81050.000N
81000.000N
80950.000N
80900.000N
80850.000N
80800.000N
80750.000N
80700.000N
80650.000N
80600.000N
80550.000N
80500.000N
80450.000N
80400.000N
80350.000N
80300.000N
80250.000N
80200.000N
80150.000N
80100.000N
80050.000N
80000.000N
79950.000N
79900.000N
79850.000N
79800.000N
79750.000N
79700.000N
79650.000N
79600.000N
79550.000N
79500.000N
79450.000N
79400.000N
79350.000N
79300.000N
79250.000N
79200.000N
79150.000N
79100.000N
79050.000N
79000.000N
78950.000N
78900.000N
78850.000N
78800.000N
78750.000N
78700.000N
78650.000N
78600.000N
78550.000N
78500.000N
78450.000N
78400.000N
78350.000N
78300.000N
78250.000N
78200.000N
78150.000N
78100.000N
78050.000N
78000.000N
77950.000N
77900.000N
77850.000N
77800.000N
77750.000N
77700.000N
77650.000N
77600.000N
77550.000N
77500.000N
77450.000N
77400.000N
77350.000N
77300.000N
77250.000N
77200.000N
77150.000N
77100.000N
77050.000N
77000.000N
76950.000N
76900.000N
76850.000N
76800.000N
76750.000N
76700.000N
76650.000N
76600.000N
76550.000N
76500.000N
76450.000N
76400.000N
76350.000N
76300.000N
76250.000N
76200.000N
76150.000N
76100.000N
76050.000N
76000.000N
75950.000N
75900.000N
75850.000N
75800.000N
75750.000N
75700.000N
75650.000N
75600.000N
75550.000N
75500.000N
75450.000N
75400.000N
75350.000N
75300.000N
75250.000N
75200.000N
75150.000N
75100.000N
75050.000N
75000.000N
74950.000N
74900.000N
74850.000N
74800.000N
74750.000N
74700.000N
74650.000N
74600.000N
74550.000N
74500.000N
74450.000N
74400.000N
74350.000N
74300.000N
74250.000N
74200.000N
74150.000N
74100.000N
74050.000N
74000.000N
73950.000N
73900.000N
73850.000N
73800.000N
73750.000N
73700.000N
73650.000N
73600.000N
73550.000N
73500.000N
73450.000N
73400.000N
73350.000N
73300.000N
73250.000N
73200.000N
73150.000N
73100.000N
73050.000N
73000.000N
72950.000N
72900.000N
72850.000N
72800.000N
72750.000N
72700.000N
72650.000N
72600.000N
72550.000N
72500.000N
72450.000N
72400.000N
72350.000N
72300.000N
72250.000N
72200.000N
72150.000N
72100.000N
72050.000N
72000.000N
71950.000N
71900.000N
71850.000N
71800.000N
71750.000N
71700.000N
71650.000N
71600.000N
71550.000N
71500.000N
71450.000N
71400.000N
71350.000N
71300.000N
71250.000N
71200.000N
71150.000N
71100.000N
71050.000N
71000.000N
70950.000N
70900.000N
70850.000N
70800.000N
70750.000N
70700.000N
70650.000N
70600.000N
70550.000N
70500.000N
70450.000N
70400.000N
70350.000N
70300.000N
70250.000N
70200.000N
70150.000N
70100.000N
70050.000N
70000.000N
69950.000N
69900.000N
69850.000N
69800.000N
69750.000N
69700.000N
69650.000N
69600.000N
69550.000N
69500.000N
69450.000N
69400.000N
69350.000N
69300.000N
69250.000N
69200.000N
69150.000N
69100.000N
69050.000N
69000.000N
68950.000N
68900.000N
68850.000N
68800.000N
68750.000N
68700.000N
68650.000N
68600.000N
68550.000N
68500.000N
68450.000N
68400.000N
68350.000N
68300.000N
68250.000N
68200.000N
68150.000N
68100.000N
68050.000N
68000.000N
67950.000N
67900.000N
67850.000N
67800.000N
67750.000N
67700.000N
67650.000N
67600.000N
67550.000N
67500.000N
67450.000N
67400.000N
67350.000N
67300.000N
67250.000N
67200.000N
67150.000N
67100.000N
67050.000N
67000.000N
66950.000N
66900.000N
66850.000N
66800.000N
66750.000N
66700.000N
66650.000N
66600.000N
66550.000N
66500.000N
66450.000N
66400.000N
66350.000N
66300.000N
66250.000N
66200.000N
66150.000N
66100.000N
66050.000N
66000.000N
65950.000N
65900.000N
65850.000N
65800.000N
65750.000N
65700.000N
65650.000N
65600.000N
65550.000N
65500.000N
65450.000N
65400.000N
65350.000N
65300.000N
65250.000N
65200.000N
65150.000N
65100.000N
65050.000N
65000.000N
64950.000N
64900.000N
64850.000N
64800.000N
64750.000N
64700.000N
64650.000N
64600.000N
64550.000N
64500.000N
64450.000N
64400.000N
64350.000N
64300.000N
64250.000N
64200.000N
64150.000N
64100.000N
64050.000N
64000.000N
63950.000N
63900.000N
63850.000N
63800.000N
63750.000N
63700.000N
63650.000N
63600.000N
63550.000N
63500.000N
63450.000N
63400.000N
63350.000N
63300.000N
63250.000N
63200.000N
63150.000N
63100.000N
63050.000N
63000.000N
62950.000N
62900.000N
62850.000N
62800.000N
62750.000N
62700.000N
62650.000N
62600.000N
62550.000N
62500.000N
62450.000N
62400.000N
62350.000N
62300.000N
62250.000N
62200.000N
62150.000N
62100.000N
62050.000N
62000.000N
61950.000N
61900.000N
61850.000N
61800.000N
61750.000N
61700.000N
61650.000N
61600.000N
61550.000N
61500.000N
61450.000N
61400.000N
61350.000N
61300.000N
61250.000N
61200.000N
61150.000N
61100.000N
61050.000N
61000.000N
60950.000N
60900.000N
60850.000N
60800.000N
60750.000N
60700.000N
60650.000N
60600.000N
60550.000N
60500.000N
60450.000N
60400.000N
60350.000N
60300.000N
60250.000N
60200.000N
60150.000N
60100.000N
60050.000N
60000.000N
59950.000N
59900.000N
59850.000N
59800.000N
59750.000N
59700.000N
59650.000N
59600.000N
59550.000N
59500.000N
59450.000N
59400.000N
59350.000N
59300.000N
59250.000N
59200.000N
59150.000N
59100.000N
59050.000N
59000.000N
58950.000N
58900.000N
58850.000N
58800.000N
58750.000N
58700.000N
58650.000N
58600.000N
58550.000N
58500.000N
58450.000N
58400.000N
58350.000N
58300.000N
58250.000N
58200.000N
58150.000N
58100.000N
58050.000N
58000.000N
57950.000N
57900.000N
57850.000N
57800.000N
57750.000N
57700.000N
57650.000N
57600.000N
57550.000N
57500.000N
57450.000N
57400.000N
57350.000N
57300.000N
57250.000N
57200.000N
57150.000N
57100.000N
57050.000N
57000.000N
56950.000N
56900.000N
56850.000N
56800.000N
56750.000N
56700.000N
56650.000N
56600.000N
56550.000N
56500.000N
56450.000N
56400.000N
56350.000N
56300.000N
56250.000N
56200.000N
56150.000N
56100.000N
56050.000N
56000.000N
55950.000N
55900.000N
55850.000N
55800.000N
55750.000N
55700.000N
55650.000N
55600.000N
55550.000N
55500.000N
55450.000N
55400.000N
55350.000N
55300.000N
55250.000N
55200.000N
55150.000N
55100.000N
55050.000N
55000.000N
54950.000N
54900.000N
54850.000N
54800.000N
54750.000N
54700.000N
54650.000N
54600.000N
54550.000N
54500.000N
54450.000N
54400.000N
54350.000N
54300.000N
54250.000N
54200.000N
54150.000N
54100.000N
54050.000N
54000.000N
53950.000N
53900.000N
53850.000N
53800.000N
53750.000N
53700.000N
53650.000N
53600.000N
53550.000N
53500.000N
53450.000N
53400.000N
53350.000N
53300.000N
53250.000N
53200.000N
53150.000N
53100.000N
53050.000N
53000.000N
52950.000N
52900.000N
52850.000N
52800.000N
52750.000N
52700.000N
52650.000N
52600.000N
52550.000N
52500.000N
52450.000N
52400.000N
52350.000N
52300.000N
52250.000N
52200.000N
52150.000N
52100.000N
52050.000N
52000.000N
51950.000N
51900.000N
51850.000N
51800.000N
51750.000N
51700.000N
51650.000N
51600.000N
51550.000N
51500.000N
51450.000N
51400.000N
51350.000N
51300.000N
51250.000N
51200.000N
51150.000N
51100.000N
51050.000N
51000.000N
50950.000N
50900.000N
50850.000N
50800.000N
50750.000N
50700.000N
50650.000N
50600.000N
50550.000N
50500.000N
50450.000N
50400.000N
50350.000N
50300.000N
50250.000N
50200.000N
50150.000N
50100.000N
50050.000N
50000.000N
49950.000N
49900.000N
49850.000N
49800.000N
49750.000N
49700.000N
49650.000N
49600.000N
49550.000N
49500.000N
49450.000N
49400.000N
49350.000N
49300.000N
49250.000N
49200.000N
49150.000N
49100.000N
49050.000N
49000.000N
48950.000N
48900.000N
48850.000N
48800.000N
48750.000N
48700.000N
48650.000N
48600.000N
48550.000N
48500.000N
48450.000N
48400.000N
48350.000N
48300.000N
48250.000N
48200.000N
48150.000N
48100.000N
48050.000N
48000.000N
47950.000N
47900.000N
47850.000N
47800.000N
47750.000N
47700.000N
47650.000N
47600.000N
47550.000N
47500.000N
47450.000N
47400.000N
47350.000N
47300.000N
47250.000N
47200.000N
47150.000N
47100.000N
47050.000N
47000.000N
46950.000N
46900.000N
46850.000N
46800.000N
46750.000N
46700.000N
46650.000N
46600.000N
46550.000N
46500.000N
46450.000N
46400.000N
46350.000N
46300.000N
46250.000N
46200.000N
46150.000N
46100.000N
46050.000N
46000.000N
45950.000N
45900.000N
45850.000N
45800.000N
45750.000N
45700.000N
45650.000N
45600.000N
45550.000N
45500.000N
45450.000N
45400.000N
45350.000N
45300.000N
45250.000N
45200.000N
45150.000N
45100.000N
45050.000N
45000.000N
44950.000N
44900.000N
44850.000N
44800.000N
44750.000N
44700.000N
44650.000N
44600.000N
44550.000N
44500.000N
44450.000N
44400.000N
44350.000N
44300.000N
44250.000N
44200.000N
44150.000N
44100.000N
44050.000N
44000.000N
43950.000N
43900.000N
43850.000N
43800.000N
43750.000N
43700.000N
43650.000N
43600.000N
43550.000N
43500.000N
43450.000N
43400.000N
43350.000N
43300.000N
43250.000N
43200.000N
43150.000N
43100.000N
43050.000N
43000.000N
42950.000N
42900.000N
42850.000N
42800.000N
42750.000N
42700.000N
42650.000N
42600.000N
42550.000N
42500.000N
42450.000N
42400.000N
42350.000N
42300.000N
42250.000N
42200.000N
42150.000N
42100.000N
42050.000N
42000.000N
41950.000N
41900.000N
41850.000N
41800.000N
41750.000N
41700.000N
41650.000N
41600.000N
41550.000N
41500.000N
41450.000N
41400.000N
41350.000N
41300.000N
41250.000N
41200.000N
41150.000N
41100.000N
41050.000N
41000.000N
40950.000N
40900.000N
40850.000N
40800.000N
40750.000N
40700.000N
40650.000N
40600.000N
40550.000N
40500.000N
40450.000N
40400.000N
40350.000N
40300.000N
40250.000N
40200.000N
40150.000N
40100.000N
40050.000N
40000.000N
39950.000N
39900.000N
39850.000N
39800.000N
39750.000N
39700.000N
39650.000N
39600.000N
39550.000N
39500.000N
39450.000N
39400.000N
39350.000N
39300.000N
39250.000N
39200.000N
39150.000N
39100.000N
39050.000N
39000.000N
38950.000N
38900.000N
38850.000N
38800.000N
38750.000N
38700.000N
38650.000N
38600.000N
38550.000N
38500.000N
38450.000N
38400.000N
38350.000N
38300.000N
38250.000N
38200.000N
38150.000N
38100.000N
38050.000N
38000.000N
37950.000N
37900.000N
37850.000N
37800.000N
37750.000N
37700.000N
37650.000N
37600.000N
37550.000N
37500.000N
37450.000N
37400.000N
37350.000N
37300.000N
37250.000N
37200.000N
37150.000N
37100.000N
37050.000N
37000.000N
36950.000N
36900.000N
36850.000N
36800.000N
36750.000N
36700.000N
36650.000N
36600.000N
36550.000N
36500.000N
36450.000N
36400.000N
36350.000N
36300.000N
36250.000N
36200.000N
36150.000N
36100.000N
36050.000N
36000.000N
35950.000N
35900.000N
35850.000N
35800.000N
35750.000N
35700.000N
35650.000N
35600.000N
35550.000N
35500.000N
35450.000N
35400.000N
35350.000N
35300.000N
35250.000N
35200.000N
35150.000N
35100.000N
35050.000N
35000.000N
34950.000N
34900.000N
34850.000N
34800.000N
34750.000N
34700.000N
34650.000N
34600.000N
34550.000N
34500.000N
34450.000N
34400.000N
34350.000N
34300.000N
34250.000N
34200.000N
34150.000N
34100.000N
34050.000N
34000.000N
33950.000N
33900.000N
33850.000N
33800.000N
33750.000N
33700.000N
33650.000N
33600.000N
33550.000N
33500.000N
33450.000N
33400.000N
33350.000N
33300.000N
33250.000N
33200.000N
33150.000N
33100.000N
33050.000N
33000.000N
32950.000N
32900.000N
32850.000N
32800.000N
32750.000N
32700.000N
32650.000N
32600.000N
32550.000N
32500.000N
32450.000N
32400.000N
32350.000N
32300.000N
32250.000N
32200.000N
32150.000N
32100.000N
32050.000N
32000.000N
31950.000N
31900.000N
31850.000N
31800.000N
31750.000N
31700.000N
31650.000N
31600.000N
31550.000N
31500.000N
31450.000N
31400.000N
31350.000N
31300.000N
31250.000N
31200.000N
31150.000N
31100.000N
31050.000N
31000.000N
30950.000N
30900.000N
30850.000N
30800.000N
30750.000N
30700.000N
30650.000N
30600.000N
30550.000N
30500.000N
30450.000N
30400.000N
30350.000N
30300.000N
30250.000N
30200.000N
30150.000N
30100.000N
30050.000N
30000.000N
29950.000N
29900.000N
29850.000N
29800.000N
29750.000N
29700.000N
29650.000N
29600.000N
29550.000N
29500.000N
29450.000N
29400.000N
29350.000N
29300.000N
29250.000N
29200.000N
29150.000N
29100.000N
29050.000N
29000.000N
28950.000N
28900.000N
28850.000N
28800.000N
28750.000N
28700.000N
28650.000N
28600.000N
28550.000N
28500.000N
28450.000N
28400.000N
28350.000N
28300.000N
28250.000N
28200.000N
28150.000N
28100.000N
28050.000N
28000.000N
27950.000N
27900.000N
27850.000N
27800.000N
27750.000N
27700.000N
27650.000N
27600.000N
27550.000N
27500.000N
27450.000N
27400.000N
27350.000N
27300.000N
27250.000N
27200.000N
27150.000N
27100.000N
27050.000N
27000.000N
26950.000N
26900.000N
26850.000N
26800.000N
26750.000N
26700.000N
26650.000N
26600.000N
26550.000N
26500.000N
26450.000N
26400.000N
26350.000N
26300.000N
26250.000N
26200.000N
26150.000N
26100.000N
26050.000N
26000.000N
25950.000N
25900.000N
25850.000N
25800.000N
25750.000N
25700.000N
25650.000N
25600.000N
25550.000N
25500.000N
25450.000N
25400.000N
25350.000N
25300.000N
25250.000N
25200.000N
25150.000N
25100.000N
25050.000N
25000.000N
24950.000N
24900.000N
24850.000N
24800.000N
24750.000N
24700.000N
24650.000N
24600.000N
24550.000N
24500.000N
24450.000N
24400.000N
24350.000N
24300.000N
24250.000N
24200.000N
24150.000N
24100.000N
24050.000N
24000.000N
23950.000N
23900.000N
23850.000N
23800.000N
23750.000N
23700.000N
23650.000N
23600.000N
23550.000N
23500.000N
23450.000N
23400.000N
23350.000N
23300.000N
23250.000N
23200.000N
23150.000N
23100.000N
23050.000N
23000.000N
22950.000N
22900.000N
22850.000N
22800.000N
22750.000N
22700.000N
22650.000N
22600.000N
22550.000N
22500.000N
22450.000N
22400.000N
22350.000N
22300.000N
22250.000N
22200.000N
22150.000N
22100.000N
22050.000N
22000.000N
21950.000N
21900.000N
21850.000N
21800.000N
21750.000N
21700.000N
21650.000N
21600.000N
21550.000N
21500.000N
21450.000N
21400.000N
21350.000N
21300.000N
21250.000N
21200.000N
21150.000N
21100.000N
21050.000N
21000.000N
20950.000N
20900.000N
20850.000N
20800.000N
20750.000N
20700.000N
20650.000N
20600.000N
20550.000N
20500.000N
20450.000N
20400.000N
20350.000N
20300.000N
20250.000N
20200.000N
20150.000N
20100.000N
20050.000N
20000.000N
19950.000N
19900.000N
19850.000N
19800.000N
19750.000N
19700.000N
19650.000N
19600.000N
19550.000N
19500.000N
19450.000N
19400.000N
19350.000N
19300.000N
19250.000N
19200.000N
19150.000N
19100.000N
19050.000N
19000.000N
18950.000N
18900.000N
18850.000N
18800.000N
18750.000N
18700.000N
18650.000N
18600.000N
18550.000N
18500.000N
18450.000N
18400.000N
18350.000N
18300.000N
18250.000N
18200.000N
18150.000N
18100.000N
18050.000N
18000.000N
17950.000N
17900.000N
17850.000N
17800.000N
17750.000N
17700.000N
17650.000N
17600.000N
17550.000N
17500.000N
17450.000N
17400.000N
17350.000N
17300.000N
17250.000N
17200.000N
17150.000N
17100.000N
17050.000N
17000.000N
16950.000N
16900.000N
16850.000N
16800.000N
16750.000N
16700.000N
16650.000N
16600.000N
16550.000N
16500.000N
16450.000N
16400.000N
16350.000N
16300.000N
16250.000N
16200.000N
16150.000N
16100.000N
16050.000N
16000.000N
15950.000N
15900.000N
15850.000N
15800.000N
15750.000N
15700.000N
15650.000N
15600.000N
15550.000N
15500.000N
15450.000N
15400.000N
15350.000N
15300.000N
15250.000N
15200.000N
15150.000N
15100.000N
15050.000N
15000.000N
14950.000N
14900.000N
14850.000N
14800.000N
14750.000N
14700.000N
14650.000N
14600.000N
14550.000N
14500.000N
14450.000N
14400.000N
14350.000N
14300.000N
14250.000N
14200.000N
14150.000N
14100.000N
14050.000N
14000.000N
13950.000N
13900.000N
13850.000N
13800.000N
13750.000N
13700.000N
13650.000N
13600.000N
13550.000N
13500.000N
13450.000N
13400.000N
13350.000N
13300.000N
13250.000N
13200.000N
13150.000N
13100.000N
13050.000N
13000.000N
12950.000N
12900.000N
12850.000N
12800.000N
12750.000N
12700.000N
12650.000N
12600.000N
12550.000N
12500.000N
12450.000N
12400.000N
12350.000N
12300.000N
12250.000N
12200.000N
12150.000N
12100.000N
12050.000N
12000.000N
11950.000N
11900.000N
11850.000N
11800.000N
11750.000N
11700.000N
11650.000N
11600.000N
11550.000N
11500.000N
11450.000N
11400.000N
11350.000N
11300.000N
11250.000N
11200.000N
11150.000N
11100.000N
11050.000N
11000.000N
10950.000N
10900.000N
10850.000N
10800.000N
10750.000N
10700.000N
10650.000N
10600.000N
10550.000N
10500.000N
10450.000N
10400.000N
10350.000N
10300.000N
10250.000N
10200.000N
10150.000N
10100.000N
10050.000N
10000.000N
9950.000N
9900.000N
9850.000N
9800.000N
9750.000N
9700.000N
9650.000N
9600.000N
9550.000N
9500.000N
9450.000N
9400.000N
9350.000N
9300.000N
9250.000N
9200.000N
9150.000N
9100.000N
9050.000N
9000.000N
8950.000N
8900.000N
8850.000N
8800.000N
8750.000N
8700.000N
8650.000N
8600.000N
8550.000N
8500.000N
8450.000N
8400.000N
8350.000N
8300.000N
8250.000N
8200.000N
8150.000N
8100.000N
8050.000N
8000.000N
7950.000N
7900.000N
7850.000N
7800.000N
7750.000N
7700.000N
7650.000N
7600.000N
7550.000N
7500.000N
7450.000N
7400.000N
7350.000N
7300.000N
7250.000N
7200.000N
7150.000N
7100.000N
7050.000N
7000.000N
6950.000N
6900.000N
6850.000N
6800.000N
6750.000N
6700.000N
6650.000N
6600.000N
6550.000N
6500.000N
6450.000N
6400.000N
6350.000N
6300.000N
6250.000N
6200.000N
6150.000N
6100.000N
6050.000N
6000.000N
5950.000N
5900.000N
5850.000N
5800.000N
5750.000N
5700.000N
5650.000N
5600.000N
5550.000N
5500.000N
5450.000N
5400.000N
5350.000N
5300.000N
5250.000N
5200.000N
5150.000N
5100.000N
5050.000N
5000.000N
4950.000N
4900.000N
4850.000N
4800.000N
4750.000N
4700.000N
4650.000N
4600.000N
4550.000N
4500.000N
4450.000N
4400.000N
4350.000N
4300.000N
4250.000N
4200.000N
4150.000N
4100.000N
4050.000N
4000.000N
3950.000N
3900.000N
3850.000N
3800.000N
3750.000N
3700.000N
3650.000N
3600.000N
3550.000N
3500.000N
3450.000N
3400.000N
3350.000N
3300.000N
3250.000N
3200.000N
3150.000N
3100.000N
3050.000N
3000.000N
2950.000N
2900.000N
2850.000N
2800.000N
2750.000N
2700.000N
2650.000N
2600.000N
2550.000N
2500.000N
2450.000N
2400.000N
2350.000N
2300.000N
2250.000N
2200.000N
2150.000N
2100.000N
2050.000N
2000.000N
1950.000N
1900.000N
1850.000N
1800.000N
1750.000N
1700.000N
1650.000N
1600.000N
1550.000N
1500.000N
1450.000N
1400.000N
1350.000N
1300.000N
1250.000N
1200.000N
1150.000N
1100.000N
1050.000N
1000.000N
950.000N
900.000N
850.000N
800.000N
750.000N
700.000N
650.000N
600.000N
550.000N
500.000N
450.000N
400.000N
350.000N
300.000N
250.000N
200.000N
150.000N
100.000N
50.000N
0.000N

AutoCAD AVAILABLE IN DIGITAL FORMAT

SEWER RECORDS PAGE 1 OF 2

106026

105738

523958

524429



O.S. REF.

TQ2405NW

Title: 295119_51 to 63 Southview road

Drawn by: gujskew

Scale: 1:1250

Date: 30/05/2018

The positions of pipes shown on this plan are believed to be correct, but Southern Water Services Ltd accept no responsibility in the event of inaccuracy.
The actual positions should be determnined on site.

WARNING: BAC pipes are constructed of Bonded Asbestos Cement
WARNING: Unknown (UNK) materials may Include Bonded Asbestos Cement

Based upon Ordnance Survey Digital Data with the permission of the controller of H.M.S.O. Crown Copyright Reserved Licence No. WU 298530.

N

Southern Water

SEWER RECORDS PAGE 2 OF 2

Node	Cover	Invert	Size	Material	Shape		Node	Cover	Invert	Size	Material	Shape		Node	Cover	Invert	Size	Material	Shape		Node	Cover	Invert	Size	Material	Shape
0701X	10.72	8.8	225	VC	CIRC		4901X	13.68	11.99	225	VC	CIRC													
0750X	10.62	9.4	150	VC	CIRC		4950X	16.47	11.47	750	CP	CIRC													
0753X	9.62	8.3	150	VC	CIRC		4951X	13.99	10.41	750	CP	CIRC													
0801X	10.12	8.32	200	VC	CIRC		4952X	14.32	12.63	150	VC	CIRC													
0850X	10.63	9.48	150	VC	CIRC		495DX	11		750	CP	CIRC													
0901X	12.11	10.15	200	VC	CIRC		9801X	11.74	9.66	200	VC	CIRC													
0950X	12.11	10	150	VC	CIRC	*	985DX	10.44		150	VC	CIRC													
0950Y	12.11		150	VC	CIRC	*																			
1004X	14.89	12.86	150	VC	CIRC																				
1005X	14.79	13.11	150	VC	CIRC																				
1054X	14.78	14.15	150	VC	CIRC																				
1701X			UNK	UNK	UNK																				
1702X			UNK	UNK	UNK																				
1801X			UNK	UNK	UNK																				
1802X			150	VC	CIRC																				
1803X			150	VC	CIRC																				
1804X			100	VC	CIRC																				
1805X			100	VC	CIRC																				
1901X	13.06	12.19	100	VC	CIRC																				
1902X	13.11	11.7	100	VC	CIRC																				
1903X	12.94	11.62	100	VC	CIRC																				
190DX			UNK	UNK	CIRC																				
191DX			UNK	UNK	CIRC																				
2006X	15.37	12.47	150	VC	CIRC																				
2054X	15.34	13.86	150	VC	CIRC																				
205DX	15.13	13.64	150	VC	CIRC																				
2702X			UNK	UNK	UNK																				
270DX			250	VC	CIRC																				
272DX			250	VC	CIRC																				
273DX			UNK	VC	CIRC																				
2801X	11.23	8.28	150	VC	CIRC																				
2802X	10.83	7.86	150	VC	CIRC																				
2803X	10.08	7.47	225	VC	CIRC																				
2804X	11.61	9.02	250	VC	CIRC																				
2805X			150	VC	CIRC																				
280DX			250	VC	CIRC																				
281DX			300	VC	CIRC																				
2850X	10.01	8.54	150	VC	CIRC																				
2851X	10.25	8.72	300	CP	CIRC																				
2852X	9.75	8.28	150	VC	CIRC																				
2901X	13.37	10.75	300	VC	CIRC																				
2902X	14.95	12.07	250	VC	CIRC																				
2903X	13.645	11.31	100	VC	CIRC																				
2904X	13.76	11.094	250	VC	CIRC																				
290DX			300	VC	CIRC																				
3004X	17.67	14.34	300	VC	CIRC																				
3007X	17.56	14.23	300	VC	CIRC																				
3051X	17.9	12.59	675	CP	CIRC																				
3052X	17.52	11.77	675	CP	CIRC																				
3801X	11.03		150	VC	CIRC																				
3802X	11.42	10.46	150	VC	CIRC																				
3850X	11.37	9.32	150	VC	CIRC																				
3901X	14.45	12.29	150	VC	CIRC																				
3902X	14.81	13.46	150	VC	CIRC																				
3950X	14.81	13.56	150	VC	CIRC																				
4001X	17.65	15.15	150	VC	CIRC	*																			
4001Y	17.65	15.11	225	VC	CIRC	*																			
4002X	18.4	14	450	CP	CIRC																				
4052X	17.37	15.45	375	CP	CIRC																				
4701X	10.72	8.96	225	VC	CIRC																				
4705X	10.5		200	VC	CIRC																				
4750X	10.73	8.55	OTHER	CP	CIRC																				
4801X	11.04		225	VC	CIRC																				
482DX	9.67		225	VC	CIRC																				
4850X	11.51	9.18	900	CP	CIRC																				

LINE STYLES / COLOURS

Brown — Foul
Foul Syphon Sewer
Foul Vacuum Main
Foul Rising Main
Red — Combined
Combined Syphon Sewer
Combined Rising Main
Lateral Drain
Orange — Building Over Agreement Area
Dark Blue — Treated Effluent
Purple — Sludge
Sewer Catchment
Section 104 Area
Light Blue — Surface Water
Surface Water Rising Main
Yellow — Private
Green — Access Shaft
Decommissioned

MATERIALS

AK	Alkathene
BAC	Bonded Asbestos Cement
BRC	Brick (Common)
BRE	Brick (Engineering)
CC	Concrete Box Culvert
CI	Cast Iron
CO	Concrete (In-Situ)
CP	Concrete (Pre-Cast)
CSB	Concrete Segments (bolted)
CSU	Concrete Segments (unbolted)
DI	Ductile Iron
GRC	Glass Reinforced Concrete
GRP	Glass Reinforced Plastic
MAC	Masonry in regular Courses
MAR	Masonry in random Courses
PE	Polyethylene
PF	Pitch Fibre
PP	Polypropylene
PVC	Polyvinyl Chloride
RPM	Reinforced Plastic Matrix
SI	Spun Iron
ST	Steel
VC	Vitrified Clay
XXX	Other
ZZZ	Unknown

LEGEND - SEWERS

Manhole (SW)
Manhole (F&C)
Lamp hole (SW)
Lamp hole (F&C)
Pumping Station (SW)
Pumping Station (F&C)
Side entry manhole (SW)
Side entry Manhole (F&C)
Blind shaft (SW)
Blind shaft (F&C)
Ejector station (SW)
Ejector station (F&C)
Watertight door (SW)
Watertight door (F&C)
Flushing ch. Mn-e (SW)
Flushing ch. Mn-e (F&C)
Flushing ch. No-e (SW)
Flushing ch. No-e (F&C)
Demarcation Chamber

Washout (SW)
Washout (F&C)
Rodding Eye (SW)
Rodding Eye (F&C)
Gauging point (SW)
Gauging point (F&C)
Intercept chamber (SW)
Intercept chamber (F&C)
Storm Tank (SW)
Storm Tank (F&C)
Vortex chamber (SW)
Vortex chamber (F&C)
Label ellipse
Dummy/S24 manhole
Outfall
Penstock chamber
Damboards
Storm Overflow
Backdrop manhole

Other (s)
Other
Change in sewer (s)
Change in sewer
Reflux valve
Flap valve
Cascade
Anode
Valve
Closed Valve
Air Valve
Hatch box (SW)
Hatch box (F&C)
Direction arrow
Emptying valve
Catchpit
Soakaway
Inlet
Balancing Pond

Wastewater treatment works
Marine treatment works
Outfall headworks
Vent
Vent column
Tidal storage tank
Blank end
Head of Public Sewer
Micro Pumping Station

SHAPES (S)

A	Arched	R	Rectangular
B	Barrel	S	Square
C	Circular	T	Trapezoidal
E	Egg	U	U Shape
H	Horseshoe	X	Other

NODE REFERENCING SYSTEM

1st digit: hundred metre easting identifier
2nd digit: hundred metre northing identifier
3rd digit: sewer type identifier
0-4 = Foul/Combined
5-9 = Surface Water
4th digit: next sequential node

Drawn by:	gujskew
Title:	295119_51 to 63 Southview road
Date:	30/05/2018

Southern Water

Appendix C

Proposed Scheme Drawings Including Drainage Strategy

Figured dimensions only are to be used. Do not scale.
Any discrepancies between this drawing and other information should be reported to Circle 25 Design
Modifications to be made only by Circle 25 Design

19012_ P02		A1
Revision Date		drwn

SITE PLAN 1:200

N

80.2 m² PRIVATE AMENITY AREA
FOOTPATH TO ADOPTABLE STANDARD
HIGHWAY TO ADOPTABLE STANDARD
COMMON DRIVE AND ACCESS PATHS
1.2 x 1.8m SECURE CYCLE SHED

proposed ridge heights shown are provisional and subject to confirmation of formation levels

REFUSE & RECYCLING BINS KEPT IN REAR GARDENS AND BOUGHT TO KERBSIDE FOR COLLECTION.

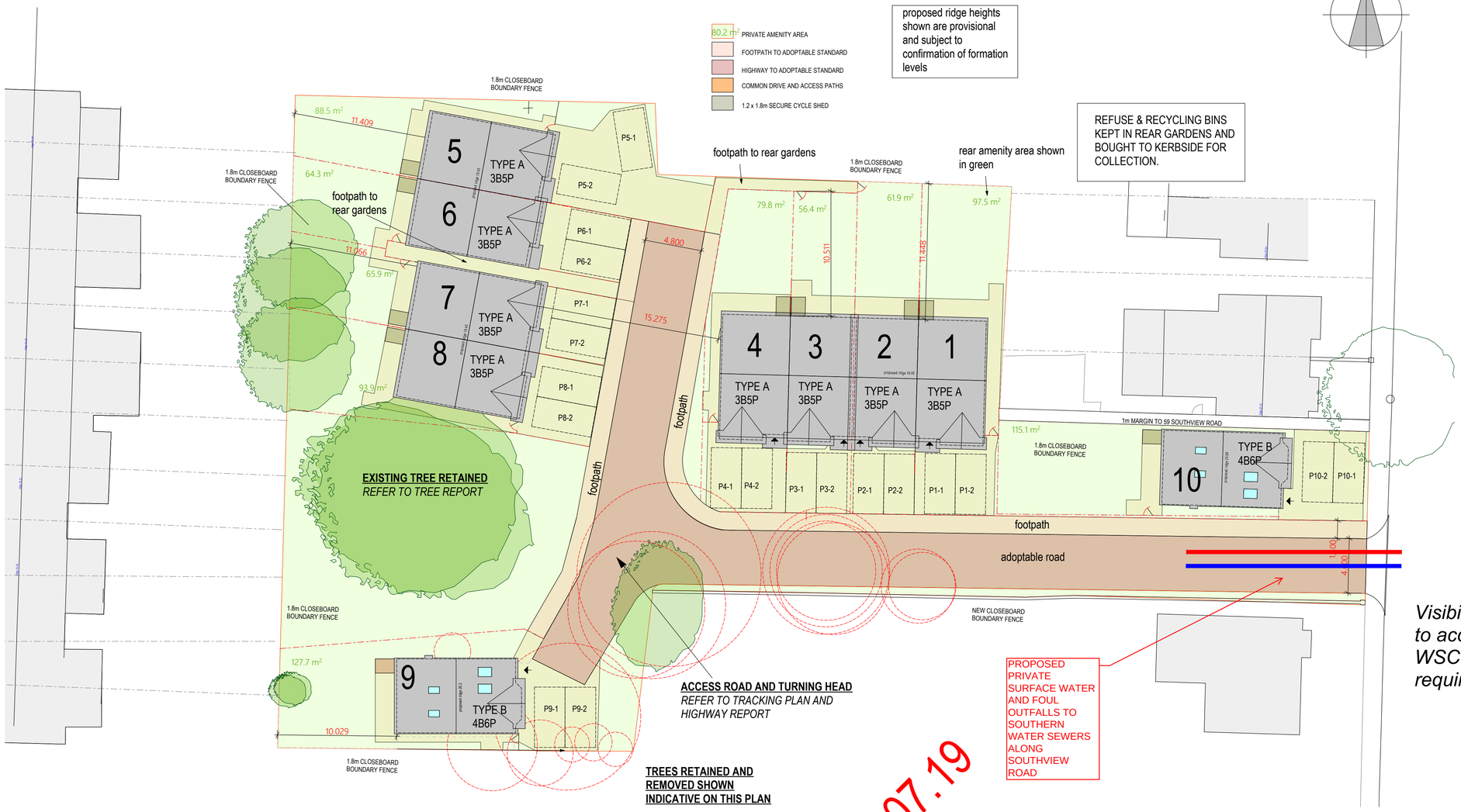

Plot 1	3B5P	96sq.m	1033sqft
Plot 2	3B5P	96sq.m	1033sqft
Plot 3	3B5P	96sq.m	1033sqft
Plot 4	3B5P	96sq.m	1033sqft
Plot 5	3B5P	96sq.m	1033sqft
Plot 6	3B5P	96sq.m	1033sqft
Plot 7	3B5P	96sq.m	1033sqft
Plot 8	3B5P	96sq.m	1033sqft
Plot 9	4B6P	115sq.m	1238sqft
Plot 10	4B6P	115sq.m	1238sqft

GROSS GAIN 10 HOUSES 998 SQ.M
NET GAIN 6 DWELLINGS
53 & 55 REMOVED = 4 DWELLINGS

Visibility splays to access to WSCC highway requirement

DRAFT 01.07.19

NGR: TQ241058

PROPOSED SITE PLAN 1:200 @ A1

REMOVE 53 / 55 SOUTHVIEW ROAD
(4 DWELLINGS_ 1 & 2 BED FLATS)

ERECT 10 NEW DWELLINGS _ 3 & 4 BED HOUSES

SDHoldings Ltd.

PLANNING

Project : Residential Redevelopment

Address : No 53-55 and land to rear of 51-63 Southview Road. Brighton BN42 4TS

Drawing : Proposed Site Plan

Date : 25.06.2019 Scale : as shown @ A1

Dwg. No. 19012_ P01 Rev.

circle 25
Architectural Design & Planning
phone 07984 207786
email office@circle25.co.uk

(c) Copyright _ Design & Drawing

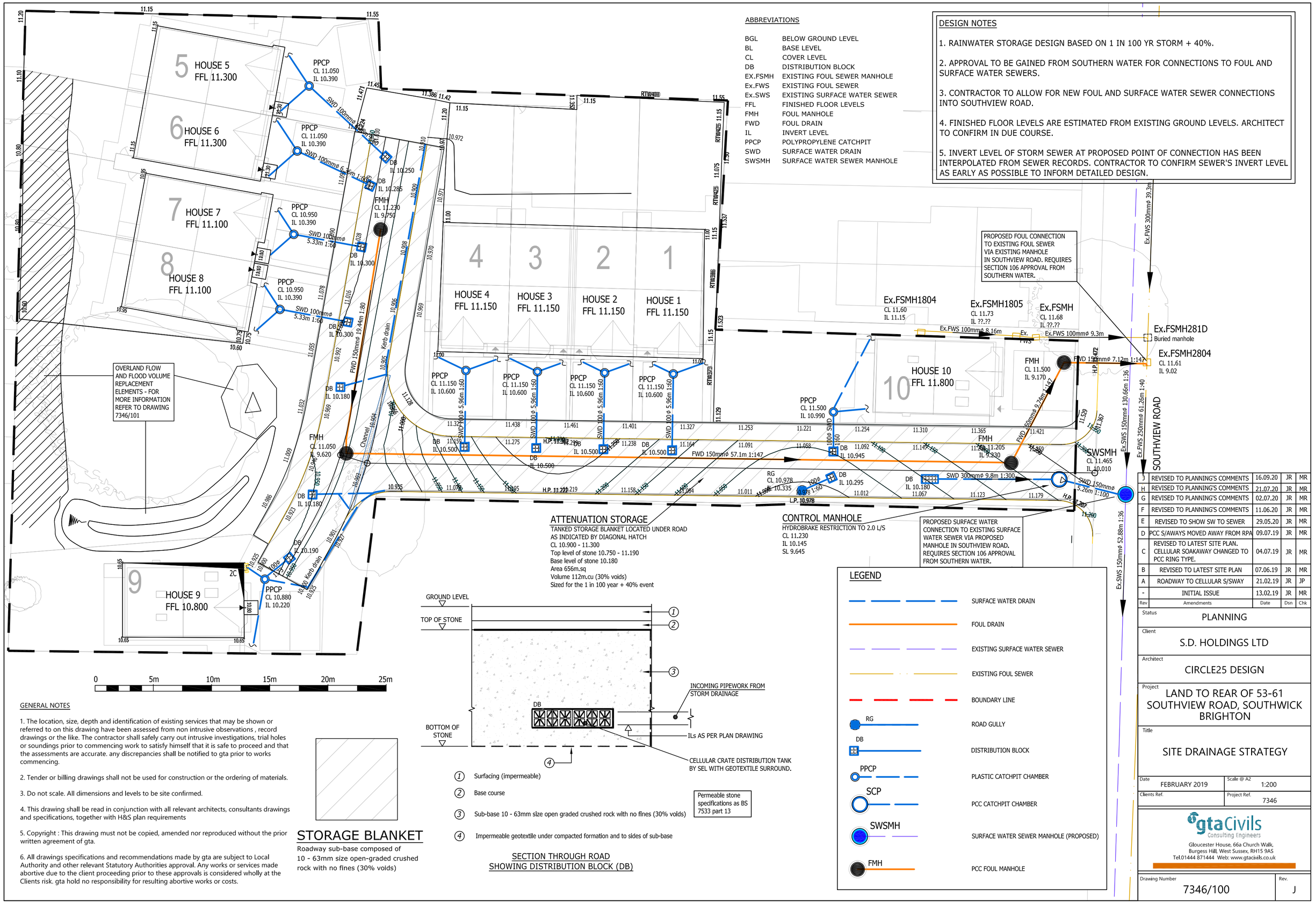

ABBREVIATIONS

BGL	BELOW GROUND LEVEL
BL	BASE LEVEL
CL	COVER LEVEL
DB	DISTRIBUTION BLOCK
EX.FSMH	EXISTING FOUL SEWER MANHOLE
Ex.FWS	EXISTING FOUL SEWER
Ex.SWS	EXISTING SURFACE WATER SEWER
FFL	FINISHED FLOOR LEVELS
FMH	FOUL MANHOLE
FWD	FOUL DRAIN
IL	INVERT LEVEL
PPCP	POLYPROPYLENE CATCHPIT
SWD	SURFACE WATER DRAIN
SWSMH	SURFACE WATER SEWER MANHOLE

DESIGN NOTES

1. RAINWATER STORAGE DESIGN BASED ON 1 IN 100 YR STORM + 40%.

2. APPROVAL TO BE GAINED FROM SOUTHERN WATER FOR CONNECTIONS TO FOUL AND SURFACE WATER SEWERS.

3. CONTRACTOR TO ALLOW FOR NEW FOUL AND SURFACE WATER SEWER CONNECTIONS INTO SOUTHVIEW ROAD.

4. FINISHED FLOOR LEVELS ARE ESTIMATED FROM EXISTING GROUND LEVELS. ARCHITECT TO CONFIRM IN DUE COURSE.

5. INVERT LEVEL OF STORM SEWER AT PROPOSED POINT OF CONNECTION HAS BEEN INTERPOLATED FROM SEWER RECORDS. CONTRACTOR TO CONFIRM SEWER'S INVERT LEVEL AS EARLY AS POSSIBLE TO INFORM DETAILED DESIGN.

ATTENUATION STORAGE

TANKED STORAGE BLANKET LOCATED UNDER ROAD AS INDICATED BY DIAGONAL HATCH
CL 10.900 - 11.300
Top level of stone 10.750 - 11.190
Base level of stone 10.180
Area 656m.sq
Volume 112m.cu (30% voids)
Sized for the 1 in 100 year + 40% event

CONTROL MANHOLE

HYDROBRAKE RESTRICTION TO 2.0 L/S
CL 11.230
IL 10.145
SL 9.645

1. Surfacing (impermeable)
2. Base course
3. Sub-base 10 - 63mm size open graded crushed rock with no fines (30% voids)
4. Impermeable geotextile under compacted formation and to sides of sub-base

Permeable stone specifications as BS 7533 part 13

SECTION THROUGH ROAD SHOWING DISTRIBUTION BLOCK (DB)

STORAGE BLANKET

Roadway sub-base composed of 10 - 63mm size open-graded crushed rock with no fines (30% voids)

LEGEND

- SURFACE WATER DRAIN
- FOUL DRAIN
- EXISTING SURFACE WATER SEWER
- EXISTING FOUL SEWER
- BOUNDARY LINE
- RG — ROAD GULLY
- DB — DISTRIBUTION BLOCK
- PPCP — PLASTIC CATCHPIT CHAMBER
- SCP — PCC CATCHPIT CHAMBER
- SWSMH — SURFACE WATER SEWER MANHOLE (PROPOSED)
- FMH — PCC FOUL MANHOLE

GENERAL NOTES

1. The location, size, depth and identification of existing services that may be shown or referred to on this drawing have been assessed from non intrusive observations , record drawings or the like. The contractor shall safely carry out intrusive investigations, trial holes or soundings prior to commencing work to satisfy himself that it is safe to proceed and that the assessments are accurate. any discrepancies shall be notified to gta prior to works commencing.

2. Tender or billing drawings shall not be used for construction or the ordering of materials.

3. Do not scale. All dimensions and levels to be site confirmed.

4. This drawing shall be read in conjunction with all relevant architects, consultants drawings and specifications, together with H&S plan requirements

5. Copyright : This drawing must not be copied, amended nor reproduced without the prior written agreement of gta.

6. All drawings specifications and recommendations made by gta are subject to Local Authority and other relevant Statutory Authorities approval. Any works or services made abortive due to the client proceeding prior to these approvals is considered wholly at the Clients risk. gta hold no responsibility for resulting abortive works or costs.

Rev	Amendments	Date	Dsn	Chk
J	REVISED TO PLANNING'S COMMENTS	16.09.20	JR	MR
H	REVISED TO PLANNING'S COMMENTS	21.07.20	JR	MR
G	REVISED TO PLANNING'S COMMENTS	02.07.20	JR	MR
F	REVISED TO PLANNING'S COMMENTS	11.06.20	JR	MR
E	REVISED TO SHOW SW TO SEWER	29.05.20	JR	MR
D	PCC S/AWAYS MOVED AWAY FROM RPA	09.07.19	JR	MR
C	REVISED TO LATEST SITE PLAN. CELLULAR SOAKAWAY CHANGED TO PCC RING TYPE.	04.07.19	JR	MR
B	REVISED TO LATEST SITE PLAN	07.06.19	JR	MR
A	ROADWAY TO CELLULAR S/SWAY	21.02.19	JR	JP
-	INITIAL ISSUE	13.02.19	JR	MR

Status: PLANNING

Client: S.D. HOLDINGS LTD

Architect: CIRCLE25 DESIGN

Project: LAND TO REAR OF 53-61 SOUTHVIEW ROAD, SOUTHWICK BRIGHTON

Title: SITE DRAINAGE STRATEGY

Date: FEBRUARY 2019 | Scale @ A2: 1:200

Clients Ref. | Project Ref.: 7346

gtaCivils Consulting Engineers
Gloucester House, 66a Church Walk,
Burgess Hill, West Sussex, RH15 9AS
Tel.01444 871444 Web: www.gtacivils.co.uk

Drawing Number: 7346/100 | Rev.: J

0 5m 10m 15m 20m 25m

OVERLAND FLOW ISSUING FROM NEIGHBOURING LAND

LEVELS IN NORTHWEST CORNER TO REMAIN AS EXISTING

1No step 150mm riser

LEVELS WITHIN HATCHED AREA TO BE LOWERED BY 100-150mm

1No step 150mm riser

PATIO HOUSES 5-8 TO BE SET 150-300mm ABOVE REAR GARDEN LEVELS

2No steps 150mm risers

LEVELS WITHIN HATCHED AREA TO BE LOWERED BY 100-150mm

New Swale/Depression to allow ponding water to replace existing ponding volume lost. TOTAL proposed volume from level of 10.42- base of storage in 2 ponds= **27.6m³**

LEVELS IN SOUTHWEST CORNER TO REMAIN AS EXISTING

OVERLAND FLOW EXITING ONTO NEIGHBOURING LAND

Existing depression maintained

OVERLAND FLOW ISSUING FROM NEIGHBOURING LAND

Flush kerbs here to allow overland flow

Low spot retained for flood storage

Flush kerbs here to allow water to flow into landscaping

Flush kerbs here to allow water to overland flow into landscaping

5 HOUSE 5 FFL 11.300

6 HOUSE 6 FFL 11.300

7 HOUSE 7 FFL 11.100

8 HOUSE 8 FFL 11.100

9 HOUSE 9 FFL 10.800

4 HOUSE 4 FFL 11.150

3 HOUSE 3 FFL 11.150

2 HOUSE 2 FFL 11.150

1 HOUSE 1 FFL 11.150

10 HOUSE 10 FFL 11.800

SOUTHVIEW ROAD

LEGEND

	OVERLAND FLOW
1/15	DIRECTION OF FALL WITH GRADIENT
+11.335(e)	EXISTING GROUND LEVEL
+11.335	PROPOSED GROUND LEVEL

ABBREVIATIONS

FFL FINISHED FLOOR LEVEL

B-B

Datum: 9.000M AOD

EXISTING CHAINAGE (m)	0.000, 3.128, 5.283, 6.758
EXISTING LEVELS (m)	10.522, 10.479, 10.440, 10.408
Final Surface (m)	10.503, 10.503, 9.880, 9.880, 10.651

SECTION B-B THROUGH PROPOSED SWALE
SCALE 1:200H, 1:40V

Height Bands
- 10.42m - 10.22m
- 10.22m - 10.02m
- 10.02m - 9.82m
- 9.82m - 9.62m
- 9.62m - 9.42m

Rev	Amendments	Date	Dsn	Chk
D	REVISED TO LLFA'S COMMENTS	16.09.20	JR	MR
C	REVISED TO LLFA'S COMMENTS	21.07.20	JR	MR
B	REVISED TO LLFA'S COMMENTS	02.07.20	JR	MR
A	REVISED TO LLFA'S COMMENTS	11.06.20	JR	MR
-	INITIAL ISSUE	29.05.20	JR	MR

Status: PLANNING

Client: S.D. HOLDINGS LTD

Architect: CIRCLE25 DESIGN

Project: LAND TO REAR OF 53-61 SOUTHVIEW ROAD, SOUTHWICK BRIGHTON

Title: OVERLAND FLOW ROUTES

Date: MAY 2020 | Scale @ A2: 1:200

Clients Ref. | Project Ref.: 7346

gtaCivils Consulting Engineers
Gloucester House, 66a Church Walk,
Burgess Hill, West Sussex, RH15 9AS
Tel.01444 871444 Web: www.gtacivils.co.uk

Drawing Number: 7346/101 | Rev.: D

GENERAL NOTES

1. The location, size, depth and identification of existing services that may be shown or referred to on this drawing have been assessed from non intrusive observations , record drawings or the like. The contractor shall safely carry out intrusive investigations, trial holes or soundings prior to commencing work to satisfy himself that it is safe to proceed and that the assessments are accurate. any discrepancies shall be notified to gta prior to works commencing.

2. Tender or billing drawings shall not be used for construction or the ordering of materials.

3. Do not scale. All dimensions and levels to be site confirmed.

4. This drawing shall be read in conjunction with all relevant architects, consultants drawings and specifications, together with H&S plan requirements

5. Copyright : This drawing must not be copied, amended nor reproduced without the prior written agreement of gta.

6. All drawings specifications and recommendations made by gta are subject to Local Authority and other relevant Statutory Authorities approval. Any works or services made abortive due to the client proceeding prior to these approvals is considered wholly at the Clients risk. gta hold no responsibility for resulting abortive works or costs.

HOUSE 5
FFL 11.300

HOUSE 6
FFL 11.300

HOUSE 7
FFL 11.100

HOUSE 8
FFL 11.100

HOUSE 4
FFL 11.150

HOUSE 3
FFL 11.150

HOUSE 2
FFL 11.150

HOUSE 1
FFL 11.150

HOUSE 10
FFL 11.800

HOUSE 9
FFL 10.800

SOUTHVIEW ROAD

NOTE

PROPOSED LEVELS ARE SHOWN IN BLACK AND CYAN COLOURS

EXISTING LEVELS ARE SHOWN IN FAINT GREY COLOUR

Rev	Amendments	Date	Dsn	Chk
B	Plots 1-4 FFLs revised	21.07.20	MR	JR
A	REVISED TO COMMENTS FROM LLFA	02.07.20	MR	JR
-	INITIAL ISSUE	11.06.20	JR	MR

Status: PLANNING

Client: S.D. HOLDINGS LTD

Architect: CIRCLE25 DESIGN

Project: LAND TO REAR OF 53-61 SOUTHVIEW ROAD, SOUTHWICK

Title: PROPOSED EXTERNAL LEVELS

Date	Scale @ A2
JUNE 2020	1:200
Clients Ref.	Project Ref. 7346

gtaCivils Consulting Engineers
Gloucester House, 66a Church Walk,
Burgess Hill, West Sussex, RH15 9AS
Tel.01444 871444 Web: www.gtacivils.co.uk

Drawing Number	Rev.
7346/102	B

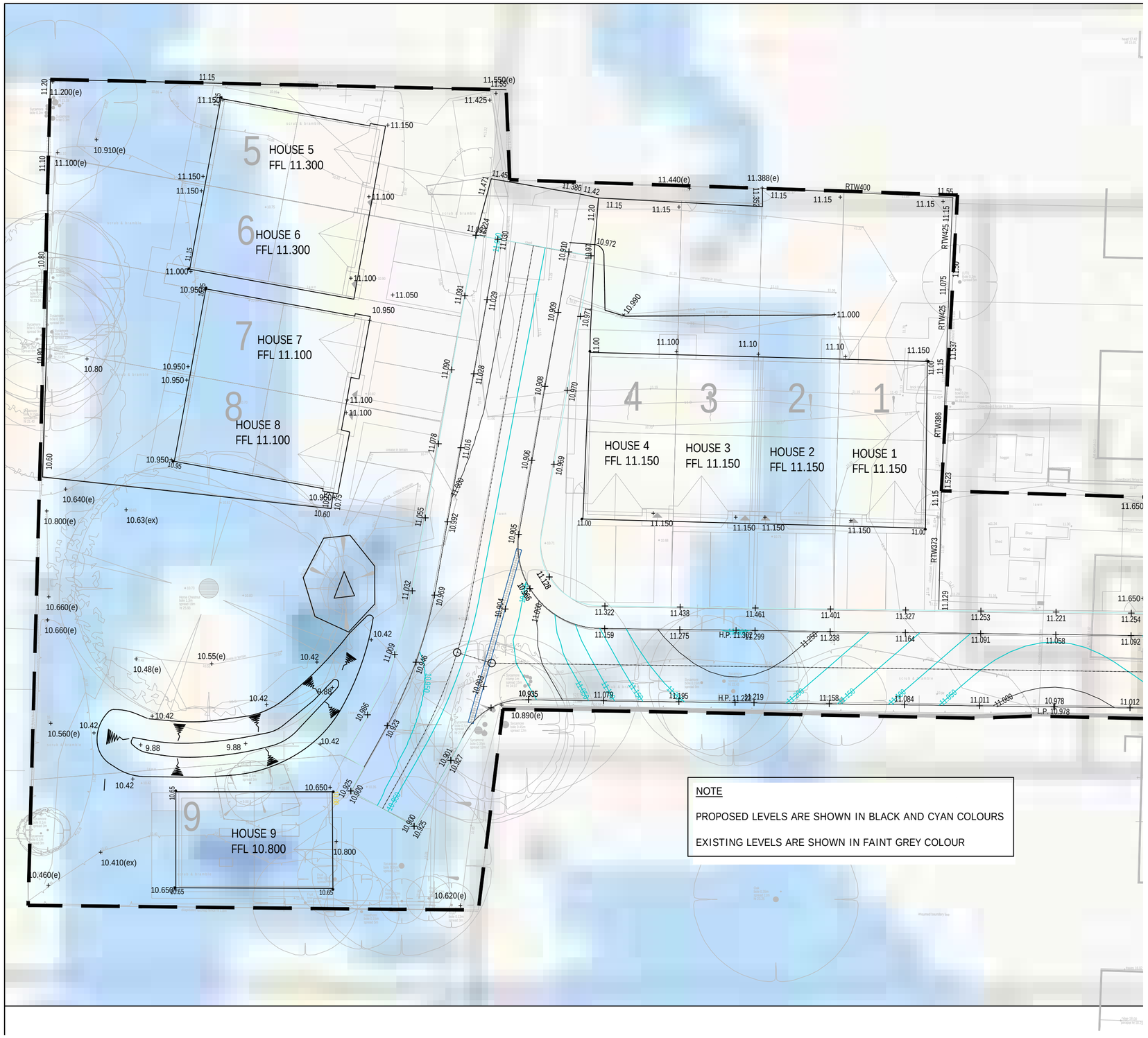
5
HOUSE 5
FFL 11.300
6
HOUSE 6
FFL 11.300
7
HOUSE 7
FFL 11.100
8
HOUSE 8
FFL 11.100
9
HOUSE 9
FFL 10.800
4
HOUSE 4
FFL 11.150
3
HOUSE 3
FFL 11.150
2
HOUSE 2
FFL 11.150
1
HOUSE 1
FFL 11.150
NOTE
PROPOSED LEVELS ARE SHOWN IN BLACK AND CYAN COLOURS
EXISTING LEVELS ARE SHOWN IN FAINT GREY COLOUR

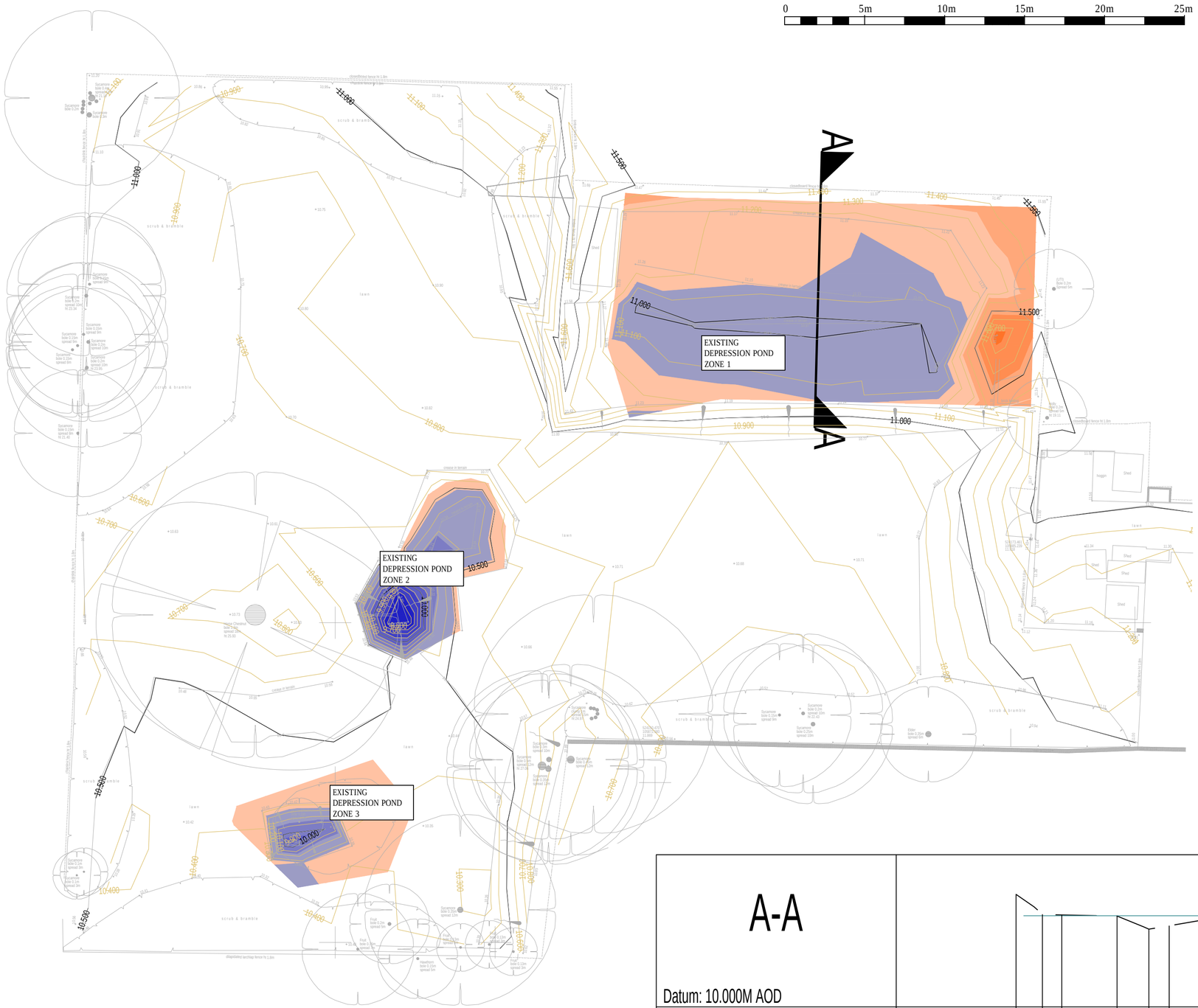

GENERAL NOTES

1. The location, size, depth and identification of existing services that may be shown or referred to on this drawing have been assessed from non intrusive observations , record drawings or the like. The contractor shall safely carry out intrusive investigations, trial holes or soundings prior to commencing work to satisfy himself that it is safe to proceed and that the assessments are accurate. any discrepancies shall be notified to gta prior to works commencing.

2. Tender or billing drawings shall not be used for construction or the ordering of materials.

3. Do not scale. All dimensions and levels to be site confirmed.

4. This drawing shall be read in conjunction with all relevant architects, consultants drawings and specifications, together with H&S plan requirements

5. Copyright : This drawing must not be copied, amended nor reproduced without the prior written agreement of gta.

6. All drawings specifications and recommendations made by gta are subject to Local Authority and other relevant Statutory Authorities approval. Any works or services made abortive due to the client proceeding prior to these approvals is considered wholly at the Clients risk. gta hold no responsibility for resulting abortive works or costs.

Summary of Existing and Proposed Floodplain Volumes

Pre-Development Floodplain:

Existing model: TOPO_SURFACE.DGM

Zone 1 - Plane at 11.14m AOD

Depth Range (m AOD)	Volume (cu.m.)
11.14 - 11.04	9.2
11.04 - 10.94	1.4
10.94 -	0.0
	10.6

Zone 2 - Plane at 10.40m AOD

Depth Range (m AOD)	Volume (cu.m.)
10.40 - 10.25	4.0
10.25 - 10.10	2.1
10.10 - 9.95	1.4
9.95 - 9.80	0.9
9.80 - 9.65	0.5
9.65 - 9.50	0.2
	9.1

Zone 3 - Plane at 10.34m AOD

Depth Range (m AOD)	Volume (cu.m.)
10.34 - 10.22	1.3
10.22 - 10.10	0.7
10.10 - 9.98	0.3
9.98 -	0.0
	2.4

Post-Development Floodplain:

Proposed model: PROPOSED_SURFACE.DGM

Zone 1 - Plane at 11.14m AOD

Depth Range (m AOD)	Volume (cu.m.)
11.14 - 11.04	12.0
11.04 - 10.94	3.7
10.94 -	0.0
	15.7

Zone 2 - Plane at 10.475m AOD

Depth Range (m AOD)	Volume (cu.m.)
10.475 - 10.325	3.0
10.325 - 10.175	2.4
10.175 - 10.025	1.7
10.025 - 9.875	1.1
9.875 - 9.725	0.7
9.725 - 9.575	0.5
9.575 -	0.0
	9.5

Zone 3 - Plane at 10.34m AOD

Depth Range (m AOD)	Volume (cu.m.)
10.34 - 10.19	8.5
10.19 - 10.04	6.2
10.04 - 9.89	4.2
9.98 - 9.74	2.0
9.74 -	0.0
	20.9

Zones 2 and 3 of the post-development setup are almost touching so these depthbands should be amalgamated.
Conclusion: there is an increase within each of the depthbands - so this complies fully

Height Bands
- 10.42m - 10.22m
- 10.22m - 10.02m
- 10.02m - 9.82m
- 9.82m - 9.62m
- 9.62m - 9.42m

A-A

Datum: 10.000M AOD

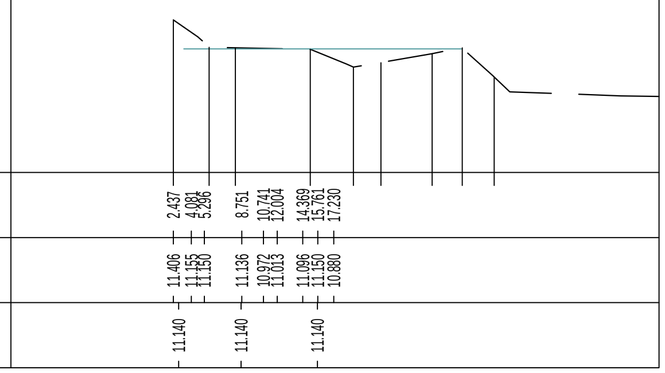

EXISTING CHAINAGE (m)	
EXISTING LEVELS (m)	
Peak Water level (overflow) (m)	

SECTION A-A THROUGH EXISTING DEPRESSION
SCALE 1:200H, 1:40V

Rev	Amendments	Date	Dsn	Chk
A	FP Volumes updated with depthbands	21.07.20	JP	MR
-	INITIAL ISSUE	02.07.20	JR	MR

Status: PLANNING

Client: S.D. HOLDINGS LTD

Architect: CIRCLE25 DESIGN

Project: LAND TO REAR OF 53-61 SOUTHVIEW ROAD, SOUTHWICK BRIGHTON

Title: EXISTING FLOOD VOLUMES AND REPLACEMENT VOLUME CALCS

Date: MAY 2020 | Scale @ A2: 1:200

Clients Ref. | Project Ref.: 7346

gtaCivils Consulting Engineers
Gloucester House, 66a Church Walk,
Burgess Hill, West Sussex, RH15 9AS
Tel.01444 871444 Web: www.gtacivils.co.uk

Drawing Number: 7346/103 | Rev.: A

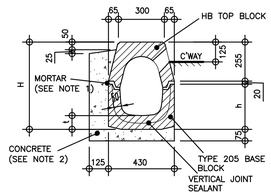

BASE UNIT	H	h	t	DEPTH: c/way CHANNEL TO INVERT (125 KERB UPSTAND)
BASE 205	480	205	70	285

HALF BATTERED TOP WITH BASE 205

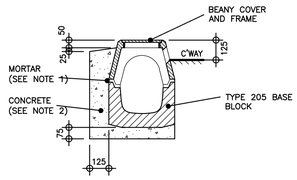

NOTES:

1. MORTAR CLASS 12 CEMENT MORTAR TO BS EN 998–2 FOR BEDDING THE TOP BLOCKS
2. CONCRETE BED, HAUNCH AND SURROUND SHALL BE:
   i. A MIX ST1 CONCRETE TO BS 8500–1&2 AND BS EN 206–1 FOR BASE BLOCKS USED IN NORMAL KERB APPLICATION.
   ii. A MIX ST4 CONCRETE TO BS 8500–1&2 AND BS EN 206–1 FOR BEANY TRAPPED GULLY AND OUTFALL DETAILS.
3. MARSHALLS' VERTICAL JOINT SEALANT, M–SEAL, SHALL BE APPLIED TO ALL BASE BLOCKS.

ACCESS COVER TYPE 1 (AC1)

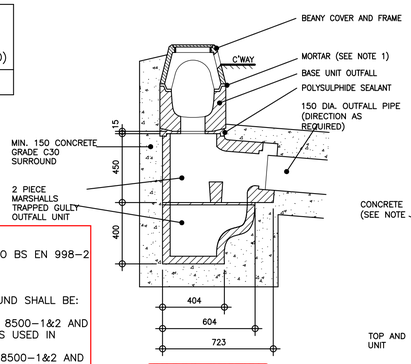

CROSS SECTION

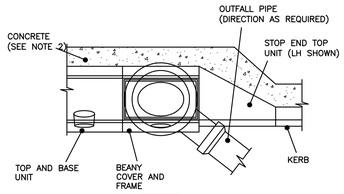

PLAN

OUTFALL TYPE 3
(150 WITH 150 DIA OUTLET)

BEANY KERB DETAILS

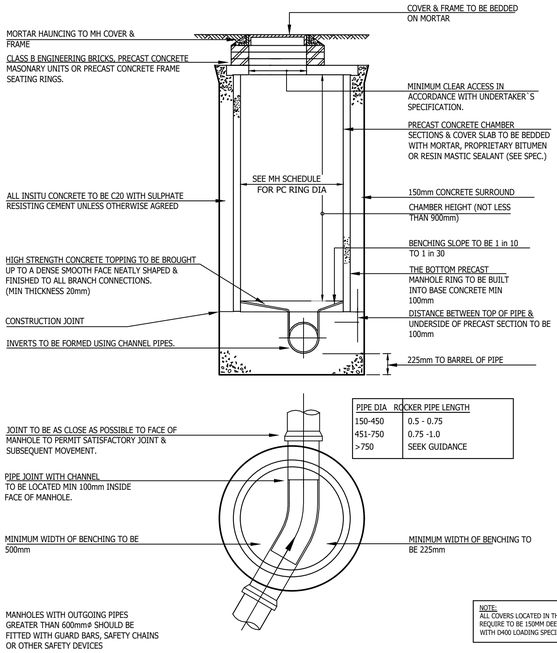

FIG 2.5 SFA 6 -
CIRCULAR PCC MANHOLE TYPE B
DEPTH 1.45m - 3m

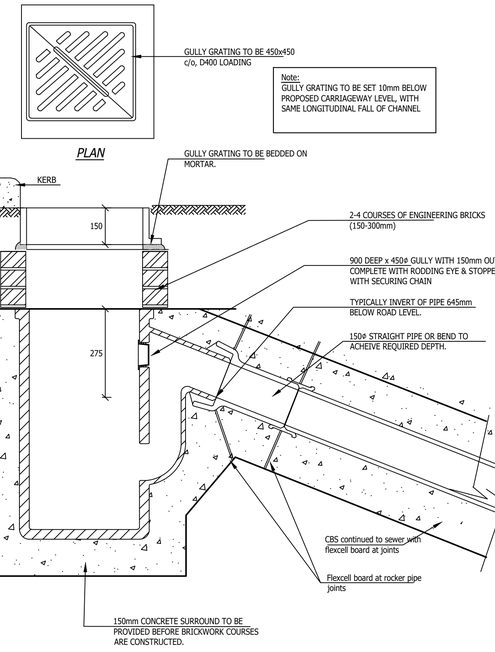

Note:
GULLY GRATING TO BE SET 10mm BELOW PROPOSED CARRIAGEWAY LEVEL, WITH SAME LONGITUDINAL FALL OF CHANNEL

ROAD GULLY

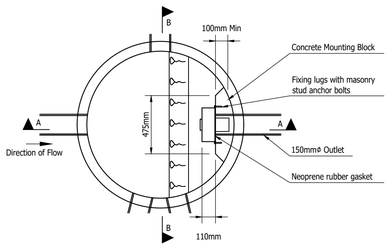

PLAN

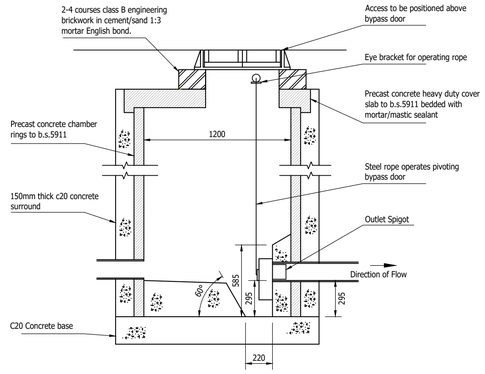

SECTION A-A

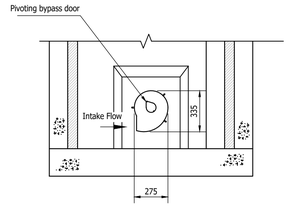

SECTION B-B

NOTES

1. ROCKER PIPES 600mm LONG FOR 100 TO 450 DIA PIPEWORK (1000mm LONG UP TO 750DIA) ON OUTLET AND EACH ENTRY STARTING 150mm FROM CONCRETE SURROUND.
2. DETAIL TO BE READ IN CONJUNCTION WITH GUIDELINES FROM HYDRO INTERNATIONAL PLC.

CONTROL CHAMBER

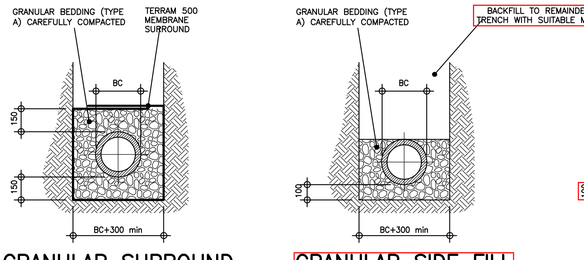

GRANULAR SURROUND
TO BE USED WHERE PIPE PASSES WITHIN 3M OF NEW OR EXISTING TREES UNLESS PIPE REQUIRED CONCRETE SURROUND

GRANULAR SIDE FILL
TO BE USED WHERE COVER TO CROWN OF PIPE IS GREATER THAN 900mm UNDER ROADS, FOOTWAYS & HARDSTANDINGS

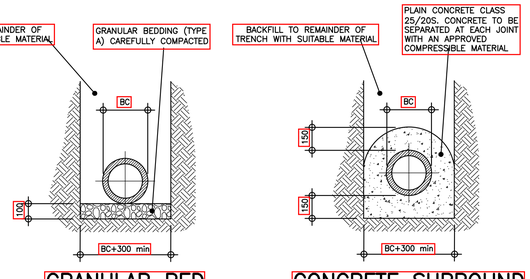

GRANULAR BED
TO BE USED WHERE COVER TO CROWN OF PIPE IS GREATER THAN 600mm IN LANDSCAPED AREAS

CONCRETE SURROUND
TO BE USED WHERE COVER TO CROWN OF PIPE IS LESS THAN 900mm UNDER ROADS, FOOTWAYS & HARDSTANDINGS AND LESS THAN 600mm IN LANDSCAPED AREAS

GRANULAR BEDDING TYPE A – SHALL CONSIST OF AGGREGATES FROM NATURAL SOURCES OR SINTERED PULVERISED FUELASH COMPLYING WITH THE RELEVANT PROVISIONS OF BS 882 AND BS 3797 PART 2 RESPECTIVELY. TO BE SIZED ACCORDING TO PIPE DIAMETER TO APPROVED DOCUMENT H OF THE BUILDING REGULATIONS –
5mm TO 10mm SIZE MATERIAL FOR 100mm PIPES, 14mm FOR 150mm PIPES & 20mm FOR PIPES 150–600mm.

PIPE BEDDING DETAILS (Scale 1:20)

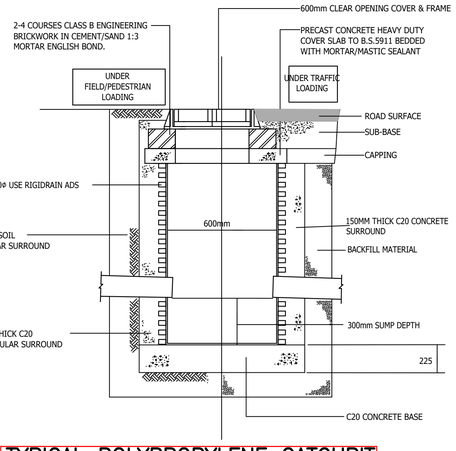

TYPICAL POLYPROPYLENE CATCHPIT

GENERAL NOTES

1. The location, size, depth and identification of existing services that may be shown or referred to on this drawing have been assessed from non intrusive observations , record drawings or the like. The contractor shall safely carry out intrusive investigations, trial holes or soundings prior to commencing work to satisfy himself that it is safe to proceed and that the assessments are accurate. any discrepancies shall be notified to gta prior to works commencing.
2. Tender or billing drawings shall not be used for construction or the ordering of materials.
3. Do not scale. All dimensions and levels to be site confirmed.
4. This drawing shall be read in conjunction with all relevant architects, consultants drawings and specifications, together with H&S plan requirements.
5. Copyright : This drawing must not be copied, amended nor reproduced without the prior written agreement of gta.
6. All drawings specifications and recommendations made by gta are subject to Local Authority and other relevant Statutory Authorities approval. Any works or services made abortive due to the client proceeding prior to these approvals is considered wholly at the Clients risk. gta hold no responsibility for resulting abortive works or costs.

Rev	Amendments	Date	Dsn	Chk
-	INITIAL ISSUE	21.07.20	JP	MR

Status: PLANNING

Client: S.D. HOLDINGS LTD

Architect: CIRCLE25 DESIGN

Project: LAND TO REAR OF 53-61 SOUTHVIEW ROAD, SOUTHWICK BRIGHTON

Title: DRAINAGE DETAILS

Date	Scale @ A1
JULY 2020	NTS
Clients Ref.	Project Ref. 7346

gta Civils & Transport
Gloucester House, 66a Church Walk,
Burgess Hill, West Sussex, RH15 9AS
Tel.01444 871444 Web: www.gtacivils.co.uk

Drawing Number	Rev.
7346/104	-

Appendix D

Micro Drainage Calculations

ICP SUDS Mean Annual Flood

Input

Return Period (years)	100	Soil	0.400
Area (ha)	0.188	Urban	0.000
SAAR (mm)	712	Region Number	Region 7

Results l/s

QBAR Rural	0.7
QBAR Urban	0.7
Q100 years	2.1
Q1 year	0.6
Q30 years	1.5
Q100 years	2.1

©1982-2019 Innovyze

Summary of Results for 100 year Return Period (+40%)

Half Drain Time : 469 minutes.

Storm Event	Max Level (m)	Max Depth (m)	Max Infiltration (l/s)	Max Control (l/s)	Max Σ Outflow (l/s)	Max Volume (m³)	Status
15 min Summer	10.406	0.226	0.0	2.0	2.0	44.5	O K
30 min Summer	10.480	0.300	0.0	2.0	2.0	58.9	O K
60 min Summer	10.553	0.373	0.0	2.0	2.0	73.5	O K
120 min Summer	10.621	0.441	0.0	2.0	2.0	86.7	O K
180 min Summer	10.649	0.469	0.0	2.0	2.0	92.2	O K
240 min Summer	10.659	0.479	0.0	2.0	2.0	94.3	O K
360 min Summer	10.665	0.485	0.0	2.0	2.0	95.3	O K
480 min Summer	10.657	0.477	0.0	2.0	2.0	93.9	O K
600 min Summer	10.648	0.468	0.0	2.0	2.0	92.1	O K
720 min Summer	10.639	0.459	0.0	2.0	2.0	90.2	O K
960 min Summer	10.618	0.438	0.0	2.0	2.0	86.2	O K
1440 min Summer	10.572	0.392	0.0	2.0	2.0	77.1	O K
2160 min Summer	10.507	0.327	0.0	2.0	2.0	64.3	O K
2880 min Summer	10.449	0.269	0.0	2.0	2.0	52.9	O K
4320 min Summer	10.357	0.177	0.0	2.0	2.0	34.9	O K
5760 min Summer	10.297	0.117	0.0	2.0	2.0	23.0	O K
7200 min Summer	10.260	0.080	0.0	1.9	1.9	15.7	O K
8640 min Summer	10.239	0.059	0.0	1.8	1.8	11.5	O K
10080 min Summer	10.229	0.049	0.0	1.6	1.6	9.6	O K
15 min Winter	10.434	0.254	0.0	2.0	2.0	50.0	O K

Storm Event	Rain (mm/hr)	Flooded Volume (m³)	Discharge Volume (m³)	Time-Peak (mins)
15 min Summer	131.128	0.0	46.1	19
30 min Summer	88.088	0.0	62.0	33
60 min Summer	56.422	0.0	79.5	64
120 min Summer	34.839	0.0	98.1	122
180 min Summer	25.861	0.0	109.3	182
240 min Summer	20.787	0.0	117.1	242
360 min Summer	15.300	0.0	129.3	360
480 min Summer	12.289	0.0	138.5	442
600 min Summer	10.359	0.0	145.9	500
720 min Summer	9.004	0.0	152.2	564
960 min Summer	7.211	0.0	162.6	694
1440 min Summer	5.263	0.0	178.0	956
2160 min Summer	3.833	0.0	194.4	1344
2880 min Summer	3.056	0.0	206.8	1728
4320 min Summer	2.218	0.0	225.0	2424
5760 min Summer	1.764	0.0	238.7	3120
7200 min Summer	1.478	0.0	249.9	3816
8640 min Summer	1.279	0.0	259.7	4416
10080 min Summer	1.133	0.0	268.2	5144
15 min Winter	131.128	0.0	51.7	18

©1982-2018 Innovyze

Summary of Results for 100 year Return Period (+40%)

Storm Event	Max Level (m)	Max Depth (m)	Max Infiltration (l/s)	Max Control (l/s)	Max Σ Outflow (l/s)	Max Volume (m³)	Status
30 min Winter	10.518	0.338	0.0	2.0	2.0	66.4	O K
60 min Winter	10.603	0.423	0.0	2.0	2.0	83.2	O K
120 min Winter	10.680	0.500	0.0	2.0	2.0	98.4	O K
180 min Winter	10.714	0.534	0.0	2.0	2.0	105.1	O K
240 min Winter	10.729	0.549	0.0	2.0	2.0	108.0	O K
360 min Winter	10.740	0.560	0.0	2.0	2.0	110.2	O K
480 min Winter	10.737	0.557	0.0	2.0	2.0	109.5	O K
600 min Winter	10.725	0.545	0.0	2.0	2.0	107.3	O K
720 min Winter	10.712	0.532	0.0	2.0	2.0	104.6	O K
960 min Winter	10.686	0.506	0.0	2.0	2.0	99.6	O K
1440 min Winter	10.627	0.447	0.0	2.0	2.0	88.0	O K
2160 min Winter	10.521	0.341	0.0	2.0	2.0	67.2	O K
2880 min Winter	10.432	0.252	0.0	2.0	2.0	49.6	O K
4320 min Winter	10.307	0.127	0.0	2.0	2.0	24.9	O K
5760 min Winter	10.245	0.065	0.0	1.8	1.8	12.9	O K
7200 min Winter	10.226	0.046	0.0	1.6	1.6	9.1	O K
8640 min Winter	10.216	0.036	0.0	1.4	1.4	7.0	O K
10080 min Winter	10.208	0.028	0.0	1.2	1.2	5.6	O K

Storm Event	Rain (mm/hr)	Flooded Volume (m³)	Discharge Volume (m³)	Time-Peak (mins)
30 min Winter	88.088	0.0	69.5	33
60 min Winter	56.422	0.0	89.0	62
120 min Winter	34.839	0.0	109.9	120
180 min Winter	25.861	0.0	122.4	178
240 min Winter	20.787	0.0	131.2	236
360 min Winter	15.300	0.0	144.9	348
480 min Winter	12.289	0.0	155.1	458
600 min Winter	10.359	0.0	163.5	560
720 min Winter	9.004	0.0	170.6	588
960 min Winter	7.211	0.0	182.1	740
1440 min Winter	5.263	0.0	199.4	1052
2160 min Winter	3.833	0.0	217.8	1468
2880 min Winter	3.056	0.0	231.7	1844
4320 min Winter	2.218	0.0	252.1	2508
5760 min Winter	1.764	0.0	267.3	3112
7200 min Winter	1.478	0.0	279.9	3744
8640 min Winter	1.279	0.0	290.8	4416
10080 min Winter	1.133	0.0	300.4	5152

©1982-2018 Innovyze

Rainfall Details

Rainfall Model	FSR	Winter Storms	Yes
Return Period (years)	100	Cv (Summer)	0.750
Region	England and Wales	Cv (Winter)	0.840
M5-60 (mm)	19.900	Shortest Storm (mins)	15
Ratio R	0.350	Longest Storm (mins)	10080
Summer Storms	Yes	Climate Change %	+40

Time Area Diagram

Total Area (ha) 0.188

Time (mins) From:	To:	Area (ha)
0	4	0.188

©1982-2018 Innovyze

Model Details

Storage is Online Cover Level (m) 10.900

Infiltration Blanket Structure

Infiltration Coefficient Base (m/hr)	0.00000	Diameter/Width (m)	6.1
Safety Factor	2.0	Length (m)	107.5
Porosity	0.30	Cap Volume Depth (m)	0.570
Invert Level (m)	10.180		

Hydro-Brake® Optimum Outflow Control

Unit Reference	MD-SHE-0071-2000-0700-2000
Design Head (m)	0.700
Design Flow (l/s)	2.0
Flush-Flo™	Calculated
Objective	Minimise upstream storage
Application	Surface
Sump Available	Yes
Diameter (mm)	71
Invert Level (m)	10.145
Minimum Outlet Pipe Diameter (mm)	100
Suggested Manhole Diameter (mm)	1200

Control Points	Head (m)	Flow (l/s)	Control Points	Head (m)	Flow (l/s)
Design Point (Calculated)	0.700	2.0	Kick-Flo®	0.450	1.6
Flush-Flo™	0.207	2.0	Mean Flow over Head Range	-	1.7

The hydrological calculations have been based on the Head/Discharge relationship for the Hydro-Brake® Optimum as specified. Should another type of control device other than a Hydro-Brake Optimum® be utilised then these storage routing calculations will be invalidated

Depth (m)	Flow (l/s)	Depth (m)	Flow (l/s)	Depth (m)	Flow (l/s)	Depth (m)	Flow (l/s)
0.100	1.8	1.200	2.6	3.000	3.9	7.000	5.8
0.200	2.0	1.400	2.7	3.500	4.2	7.500	6.0
0.300	2.0	1.600	2.9	4.000	4.5	8.000	6.2
0.400	1.8	1.800	3.1	4.500	4.7	8.500	6.4
0.500	1.7	2.000	3.2	5.000	5.0	9.000	6.6
0.600	1.9	2.200	3.4	5.500	5.2	9.500	6.8
0.800	2.1	2.400	3.5	6.000	5.4		
1.000	2.4	2.600	3.7	6.500	5.6		

©1982-2018 Innovyze

Summary of Results for 1000 year Return Period

Half Drain Time : 569 minutes.

Storm Event	Max Level (m)	Max Depth (m)	Max Infiltration (l/s)	Max Control (l/s)	Max Σ Outflow (l/s)	Max Volume (m³)	Status
15 min Summer	10.446	0.266	0.0	2.0	2.0	52.4	O K
30 min Summer	10.540	0.360	0.0	2.0	2.0	70.9	O K
60 min Summer	10.637	0.457	0.0	2.0	2.0	89.9	O K
120 min Summer	10.720	0.540	0.0	2.0	2.0	106.2	O K
180 min Summer	10.900	0.720	0.0	2.1	2.1	112.4	FLOOD
240 min Summer	10.902	0.722	0.0	2.1	2.1	114.1	FLOOD
360 min Summer	10.902	0.722	0.0	2.1	2.1	114.3	FLOOD
480 min Summer	10.900	0.720	0.0	2.1	2.1	112.4	FLOOD
600 min Summer	10.740	0.560	0.0	2.0	2.0	110.2	O K
720 min Summer	10.726	0.546	0.0	2.0	2.0	107.4	O K
960 min Summer	10.699	0.519	0.0	2.0	2.0	102.1	O K
1440 min Summer	10.648	0.468	0.0	2.0	2.0	92.1	O K
2160 min Summer	10.568	0.388	0.0	2.0	2.0	76.4	O K
2880 min Summer	10.495	0.315	0.0	2.0	2.0	62.0	O K
4320 min Summer	10.383	0.203	0.0	2.0	2.0	40.0	O K
5760 min Summer	10.310	0.130	0.0	2.0	2.0	25.5	O K
7200 min Summer	10.266	0.086	0.0	1.9	1.9	17.0	O K
8640 min Summer	10.241	0.061	0.0	1.8	1.8	12.0	O K
10080 min Summer	10.230	0.050	0.0	1.7	1.7	9.8	O K
15 min Winter	10.479	0.299	0.0	2.0	2.0	58.9	O K

Storm Event	Rain (mm/hr)	Flooded Volume (m³)	Discharge Volume (m³)	Time-Peak (mins)
15 min Summer	153.682	0.0	54.1	19
30 min Summer	105.125	0.0	74.0	33
60 min Summer	68.009	0.0	95.8	64
120 min Summer	41.927	0.0	118.1	122
180 min Summer	30.855	0.3	130.4	182
240 min Summer	24.550	1.9	138.3	242
360 min Summer	17.854	2.2	150.9	360
480 min Summer	14.210	0.3	160.2	430
600 min Summer	11.888	0.0	167.5	516
720 min Summer	10.267	0.0	173.6	578
960 min Summer	8.136	0.0	183.4	704
1440 min Summer	5.843	0.0	197.6	982
2160 min Summer	4.181	0.0	212.2	1384
2880 min Summer	3.290	0.0	222.6	1756
4320 min Summer	2.340	0.0	237.5	2464
5760 min Summer	1.834	0.0	248.1	3120
7200 min Summer	1.519	0.0	256.9	3816
8640 min Summer	1.303	0.0	264.5	4488
10080 min Summer	1.145	0.0	271.2	5144
15 min Winter	153.682	0.0	60.6	19

©1982-2020 Innovyze

Summary of Results for 1000 year Return Period

Storm Event	Max Level (m)	Max Depth (m)	Max Infiltration (l/s)	Max Control (l/s)	Max Σ Outflow (l/s)	Max Volume (m³)	Status
30 min Winter	10.586	0.406	0.0	2.0	2.0	79.9	O K
60 min Winter	10.695	0.515	0.0	2.0	2.0	101.4	O K
120 min Winter	10.908	0.728	0.0	2.1	2.1	120.0	FLOOD
180 min Winter	10.915	0.735	0.0	2.1	2.1	127.4	FLOOD
240 min Winter	10.918	0.738	0.0	2.1	2.1	130.1	FLOOD
360 min Winter	10.920	0.740	0.0	2.1	2.1	131.9	FLOOD
480 min Winter	10.918	0.738	0.0	2.1	2.1	130.3	FLOOD
600 min Winter	10.915	0.735	0.0	2.1	2.1	127.1	FLOOD
720 min Winter	10.911	0.731	0.0	2.1	2.1	123.4	FLOOD
960 min Winter	10.905	0.725	0.0	2.1	2.1	117.2	FLOOD
1440 min Winter	10.712	0.532	0.0	2.0	2.0	104.6	O K
2160 min Winter	10.604	0.424	0.0	2.0	2.0	83.4	O K
2880 min Winter	10.487	0.307	0.0	2.0	2.0	60.5	O K
4320 min Winter	10.332	0.152	0.0	2.0	2.0	29.8	O K
5760 min Winter	10.254	0.074	0.0	1.9	1.9	14.6	O K
7200 min Winter	10.229	0.049	0.0	1.6	1.6	9.6	O K
8640 min Winter	10.217	0.037	0.0	1.4	1.4	7.2	O K
10080 min Winter	10.209	0.029	0.0	1.3	1.3	5.7	O K

Storm Event	Rain (mm/hr)	Flooded Volume (m³)	Discharge Volume (m³)	Time-Peak (mins)
30 min Winter	105.125	0.0	82.9	33
60 min Winter	68.009	0.0	107.3	62
120 min Winter	41.927	7.9	132.3	120
180 min Winter	30.855	15.3	146.1	178
240 min Winter	24.550	17.9	154.9	236
360 min Winter	17.854	19.7	169.1	350
480 min Winter	14.210	18.2	179.4	458
600 min Winter	11.888	15.0	187.6	560
720 min Winter	10.267	11.3	194.5	586
960 min Winter	8.136	5.0	205.4	732
1440 min Winter	5.843	0.0	221.3	1054
2160 min Winter	4.181	0.0	237.6	1516
2880 min Winter	3.290	0.0	249.3	1876
4320 min Winter	2.340	0.0	266.0	2548
5760 min Winter	1.834	0.0	277.9	3120
7200 min Winter	1.519	0.0	287.7	3744
8640 min Winter	1.303	0.0	296.3	4488
10080 min Winter	1.145	0.0	303.7	5144

©1982-2020 Innovyze

Rainfall Details

Rainfall Model	FSR	Winter Storms	Yes
Return Period (years)	1000	Cv (Summer)	0.750
Region	England and Wales	Cv (Winter)	0.840
M5-60 (mm)	19.900	Shortest Storm (mins)	15
Ratio R	0.350	Longest Storm (mins)	10080
Summer Storms	Yes	Climate Change %	+0

Time Area Diagram

Total Area (ha) 0.188

Time (mins) From:	To:	Area (ha)
0	4	0.188

©1982-2020 Innovyze

Model Details

Storage is Online Cover Level (m) 10.900

Infiltration Blanket Structure

Infiltration Coefficient Base (m/hr)	0.00000	Diameter/Width (m)	6.1
Safety Factor	2.0	Length (m)	107.5
Porosity	0.30	Cap Volume Depth (m)	0.570
Invert Level (m)	10.180		

Hydro-Brake® Optimum Outflow Control

Unit Reference	MD-SHE-0071-2000-0700-2000
Design Head (m)	0.700
Design Flow (l/s)	2.0
Flush-Flo™	Calculated
Objective	Minimise upstream storage
Application	Surface
Sump Available	Yes
Diameter (mm)	71
Invert Level (m)	10.145
Minimum Outlet Pipe Diameter (mm)	100
Suggested Manhole Diameter (mm)	1200

Control Points	Head (m)	Flow (l/s)	Control Points	Head (m)	Flow (l/s)
Design Point (Calculated)	0.700	2.0	Kick-Flo®	0.450	1.6
Flush-Flo™	0.207	2.0	Mean Flow over Head Range	-	1.7

The hydrological calculations have been based on the Head/Discharge relationship for the Hydro-Brake® Optimum as specified. Should another type of control device other than a Hydro-Brake Optimum® be utilised then these storage routing calculations will be invalidated

Depth (m)	Flow (l/s)	Depth (m)	Flow (l/s)	Depth (m)	Flow (l/s)	Depth (m)	Flow (l/s)
0.100	1.8	1.200	2.6	3.000	3.9	7.000	5.8
0.200	2.0	1.400	2.7	3.500	4.2	7.500	6.0
0.300	2.0	1.600	2.9	4.000	4.5	8.000	6.2
0.400	1.8	1.800	3.1	4.500	4.7	8.500	6.4
0.500	1.7	2.000	3.2	5.000	5.0	9.000	6.6
0.600	1.9	2.200	3.4	5.500	5.2	9.500	6.8
0.800	2.1	2.400	3.5	6.000	5.4		
1.000	2.4	2.600	3.7	6.500	5.6		

©1982-2020 Innovyze

Appendix E

Site Investigation (Winter BRE365 Soakage Testing and Groundwater Monitoring)

5. STORMWATER INFILTRATION SYSTEMS

In-situ infiltration testing[3] was carried out in trial pits TP101 to TP105. From the test results calculations were made to determine the infiltration rate that could be expected for infiltration systems constructed into the underlying Head soils.

In general, for each test the soil infiltration rate (f) was calculated by dividing the volume of water lost between 75% and 25% of the initial test depth by the sum of the average surface area of the sides of the trial pit in contact with the water during the test monitoring period, and its base area. This figure was then divided by the test duration (time taken for the water level to fall between 75% and 25% of the initial test depth) to give the soil infiltration rate in metres per second.

During the tests performed within trial pits TP101 (Test 1), TP101 (Test 3), TP103 (Test 1) and TP103 (Test 3), the water level within the test pits did not fall below 25% of the initial test depth due to either the water level not being able to be sufficiently raised during filling (TP101) or the pit being filled for another test prior to the 25% level having been met (TP103). Calculation of the soil infiltration rates in accordance with the BRE digest was not possible for these tests. The soil infiltration rate has therefore been calculated by dividing the volume of water lost during the test by the product of the average surface area of the trial pit in contact with water during the test period and the test duration in seconds.

The infiltration rates derived from the tests conducted within the Head deposits are summarised in the following table.

Table 2. Calculated Infiltration Rates

Exploratory Hole	Test Response Zone Depth (m)		Infiltration Rate (f) (m/sec)
	Top	Bottom	
TP101 Test 1	2.70	2.90	2.5×10^{-5}
TP101 Test 2	2.31	2.90	1.4×10^{-4}
TP101 Test 3	2.56	2.90	8.8×10^{-5}
TP102 Test 1	2.03	2.90	8.0×10^{-5}
TP102 Test 2	1.02	2.90	6.7×10^{-5}
TP102 Test 3	0.85	2.90	5.6×10^{-5}
TP102 Test 4	0.53	2.90	4.3×10^{-5}
TP103 Test 1	0.85	3.00	3.5×10^{-5}
TP103 Test 2	0.25	3.00	8.4×10^{-6}
TP103 Test 3	0.92	3.00	8.4×10^{-6}
TP103 Test 4	0.41	3.00	7.6×10^{-6}
TP104 Test 1	0.62	3.00	1.3×10^{-5}
TP104 Test 2	0.26	3.00	1.0×10^{-5}
TP104 Test 3	0.38	3.00	9.0×10^{-6}
TP104 Test 4	0.39	3.00	8.9×10^{-6}
TP105 Test 1	0.00	1.00	3.8×10^{-5}
TP105 Test 2	0.00	1.00	2.4×10^{-5}

[3] Conducted in general accordance with the requirements of BRE 365, Soakaway Design.

Exploratory Hole	Test Response Zone Depth (m)		Infiltration Rate (f) (m/sec)
	Top	Bottom	
TP105 Test 3	0.00	1.00	2.3×10^{-5}
TP105 Test 4	0.00	1.00	1.5×10^{-5}

The value 'f' is equivalent to the soil infiltration coefficient 'q' quoted in the Construction Industry Research and Information Association (CIRIA) Report 156.

The results from the infiltration tests indicate that the Head soils possess moderate to good infiltration characteristics. The results from the infiltration tests should be provided to engineers responsible for the design of the drainage system.

To comply with building regulations[4], point discharging infiltration systems (conventional ring or trench soakaways) are required to be constructed a minimum of 5.0m away from proposed or existing buildings.

Ashdown Site Investigation Ltd.

[4] The Building Regulations 2010; Part H; Drainage and Waste Disposal

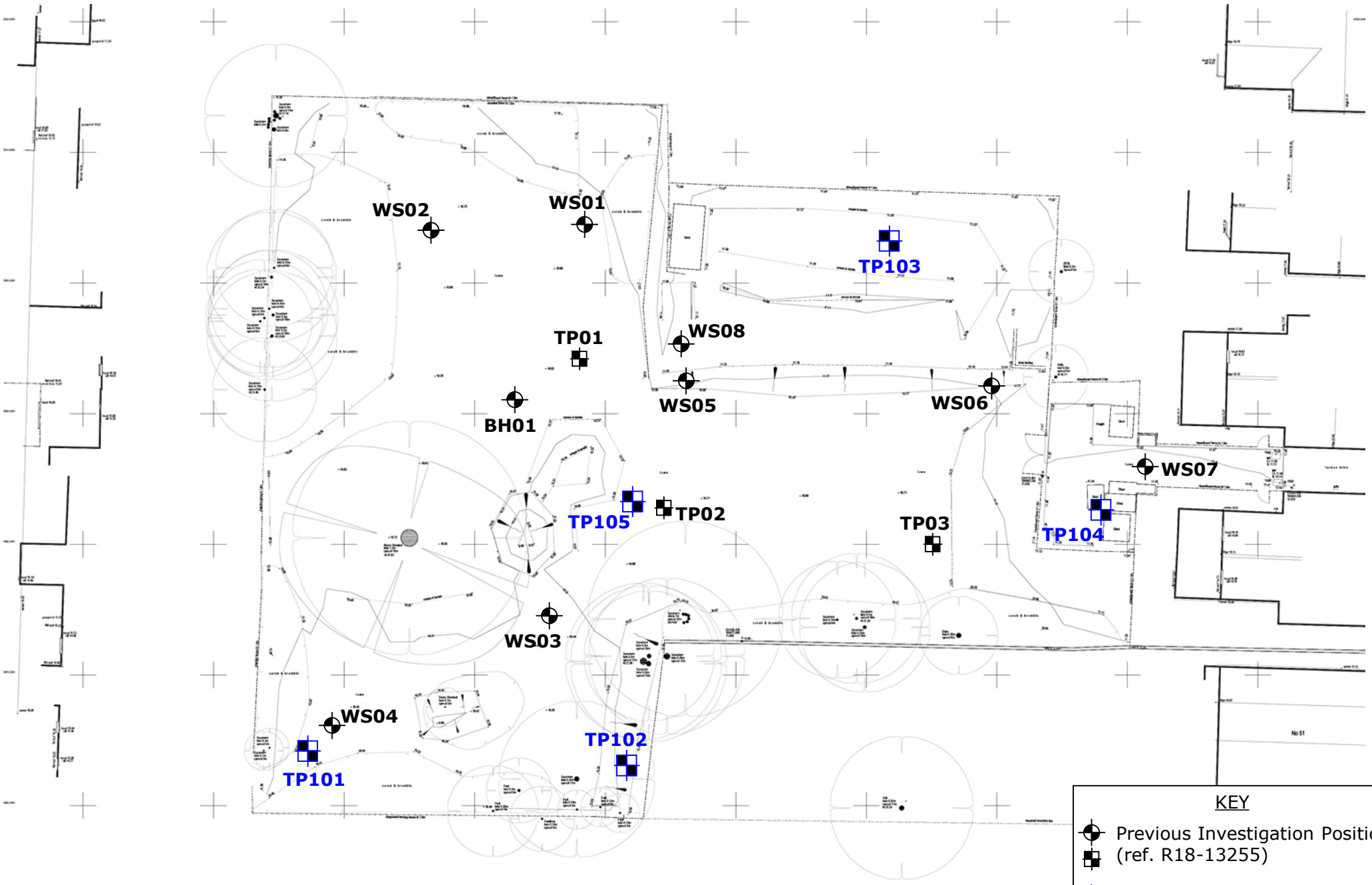

ASHDOWN SITE INVESTIGATION LIMITED	Site: 53 & 55 and Land Rear of 51-63 Southview Road, Southwick, West Sussex.	Site Plan. Not To Scale	Figure 2 P14278

ASHDOWN SITE INVESTIGATION LIMITED
E-mail: contact@ashdownsi.co.uk
Web: www.ashdownsi.co.uk
Tel: 01273 483119

Site Name: 53 & 55 and Land Rear of 51-63 Southview Road, Southwick, West Sussex

Job Number: P14278

Start Date: 19/11/2019

End Date: 19/11/2019

Trial Pit Number: **TP101** Sheet 1 of 1

Samples and In Situ Testing				Legend	Depth/ Reduced Level	Stratum Description
Sample/ Test Type	Depth From (m)	Depth To (m)	Test Result			
					0.00	Topsoil with frequent fine rootlets.
					0.30	Orange brown gravelly slightly sandy CLAY. Gravel is angular to subrounded fine to coarse flint. (Head)
D	1.00					becoming sandy below 1.00m depth.
D	1.90				2.00	Light orange brown very gravelly clayey fine to coarse SAND. Gravel is angular to subrounded fine to coarse flint. (Head)
D	2.80				2.90	End of trial pit at 2.90m

Remarks

Groundwater: Trial pit dry on completion.

Stability: Trial pit stable on completion.

Notes: n/a

Excavation Method: HDP

Pit Length: 2.20m

Pit Width: 0.70m

Made By: GR

ASHDOWN SITE INVESTIGATION LIMITED
E-mail: contact@ashdownsi.co.uk
Web: www.ashdownsi.co.uk
Tel: 01273 483119

Site Name: 53 & 55 and Land Rear of 51-63 Southview Road, Southwick, West Sussex

Job Number: P14278

Start Date: 19/11/2019

End Date: 19/11/2019

Trial Pit Number: **TP102**

Samples and In Situ Testing				Legend	Depth/ Reduced Level	Stratum Description
Sample/ Test Type	Depth From (m)	Depth To (m)	Test Result			
					0.00	Topsoil with occasional fragments of brick and frequent roots and rootlets.
					0.30	Brown slightly gravelly slightly sandy CLAY. Gravel is angular to subangular fine to coarse flint with occasional chalk. Sand is fine to coarse. (Head)
D	1.00				1.10	Orange brown and brown mottled very gravelly sandy CLAY. Gravel is fine to coarse angular to subrounded flint. Sand is fine to coarse. (Head)
D	1.90				2.00	Orange brown gravelly silty fine to coarse SAND. Gravel is angular to subrounded fine to coarse flint. (Head)
D	2.50				2.90	End of trial pit at 2.90m

Remarks

Groundwater: Trial pit dry on completion.

Stability: Trial pit stable on completion.

Notes: n/a

Excavation Method: HDP

Pit Length: 2.20m

Pit Width: 0.60m

Made By: GR

ASHDOWN SITE INVESTIGATION
L•I•M•I•T•E•D
E-mail: contact@ashdownsi.co.uk
Web: www.ashdownsi.co.uk
Tel: 01273 483119

Site Name: 53 & 55 and Land Rear of 51-63 Southview Road, Southwick, West Sussex

Job Number: P14278

Start Date: 19/11/2019

End Date: 19/11/2019

Trial Pit Number: **TP103**

Samples and In Situ Testing				Legend	Depth/ Reduced Level	Stratum Description
Sample/ Test Type	Depth From (m)	Depth To (m)	Test Result			
					0.00	Topsoil with frequent roots and rootlets.
					0.20	MADE GROUND: Dark brown gravelly sandy clay. Gravel is subangular to subrounded fine to coarse flint, chalk and rare brick fragmemts.
					0.40	Orange brown and brown mottled very gravelly slightly sandy CLAY. Gravel is angular to subrounded fine to coarse flint and chalk. Sand is fine to coarse. (Head)
D	1.00					
					1.50	Light brown gravelly slightly sandy silty CLAY. Gravel is angular to subrounded fine to coarse flint and chalk. (Head)
D	2.00					
D	3.00				3.00	End of trial pit at 3.00m

Remarks

Groundwater: Trial pit dry on completion.

Stability: Trial pit stable on completion.

Notes: n/a

Excavation Method: HDP

Pit Length: 2.20m

Pit Width: 0.60m

Made By: GR

ASHDOWN SITE INVESTIGATION L•I•M•I•T•E•D
E-mail: contact@ashdownsi.co.uk
Web: www.ashdownsi.co.uk
Tel: 01273 483119

Site Name: 53 & 55 and Land Rear of 51-63 Southview Road, Southwick, West Sussex

Job Number: P14278

Start Date: 19/11/2019

End Date: 19/11/2019

Trial Pit Number: **TP104**

Samples and In Situ Testing				Legend	Depth/ Reduced Level	Stratum Description
Sample/ Test Type	Depth From (m)	Depth To (m)	Test Result			
					0.00	Topsoil.
					0.15	MADE GROUND: Dark brown and black brown very sandy angular to subangular fine to coarse gravel of flint, brick, clinker-like material, charcoal-like material, plastic, glass and crystalline rock.
					0.40	Orange brown and brown gravelly slightly sandy CLAY. Gravel is angular to subrounded fine to coarse flint and chalk. (Head)
D	1.00					
D	2.00					becoming light orange brown and silty with increased chalk gravel below 2.00m depth.
D	3.00				3.00	End of trial pit at 3.00m

Remarks

Groundwater: Trial pit dry on completion.

Stability: Trial pit stable on completion.

Notes: n/a

Excavation Method: HDP

Pit Length: 2.00m

Pit Width: 0.60m

Made By: GR

ASHDOWN SITE INVESTIGATION LIMITED
E-mail: contact@ashdownsi.co.uk
Web: www.ashdownsi.co.uk
Tel: 01273 483119

Site Name: 53 & 55 and Land Rear of 51-63 Southview Road, Southwick, West Sussex

Job Number: P14278

Start Date: 19/11/2019

End Date: 19/11/2019

Trial Pit Number: **TP105** Sheet 1 of 1

Samples and In Situ Testing				Legend	Depth/ Reduced Level	Stratum Description
Sample/ Test Type	Depth From (m)	Depth To (m)	Test Result			
					0.00	Topsoil with occasional brick fragments, rootlets and roots.
					0.30	Brown gravelly sandy CLAY with occasional fine rootlets. Gravel is angular to subangular fine to coarse flint. (Head)
D	1.00				1.00	End of trial pit at 1.00m

Remarks

Groundwater: Trial pit dry on completion.

Stability: Trial pit stable on completion.

Notes: n/a

Excavation Method: HDP

Pit Length: 1.30m

Pit Width: 0.70m

Made By: GR

Ashdown Site Investigation Limted

Site: 53 & 55 and Land Rear of 51-63 Southview Road, Southwick, West Sussex	Report No. P14278

Groundwater Monitoring Results - WS01

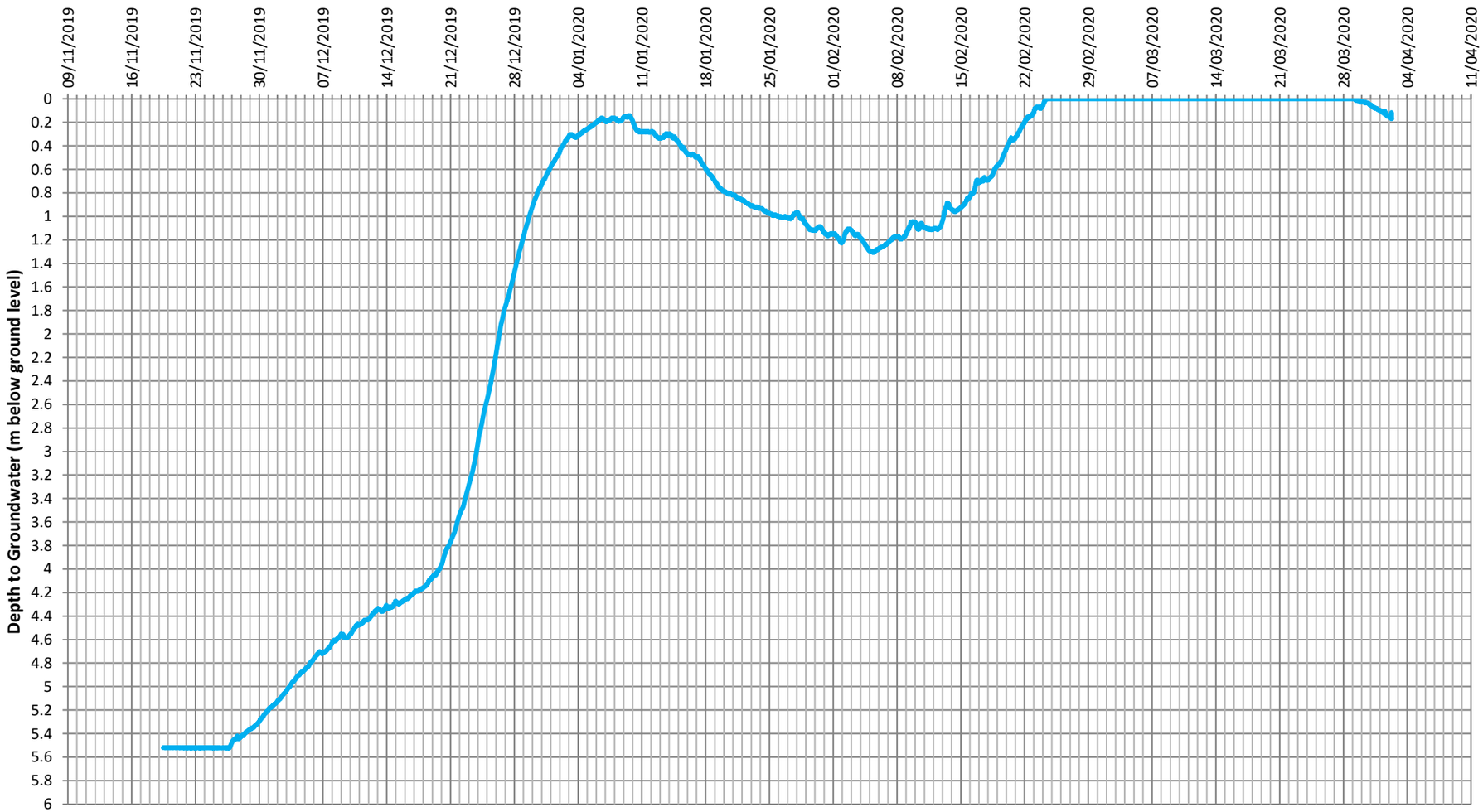

Ashdown Site Investigation Limted

Site: 53 & 55 and Land Rear of 51-63 Southview Road, Southwick, West Sussex	Report No. P14278

Groundwater Monitoring Results - WS07

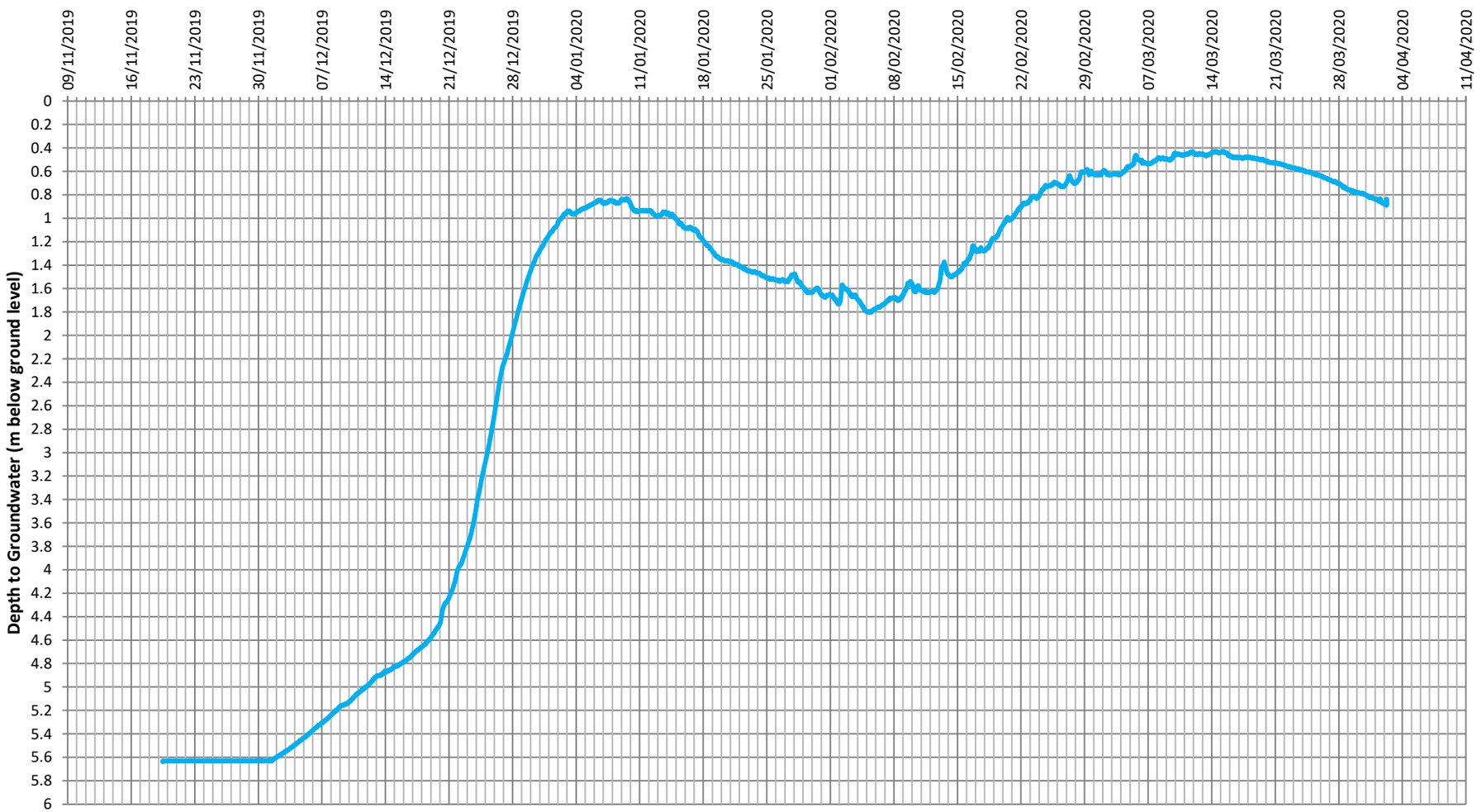

Appendix F

Southern Water's Correspondence

from Southern Water

John Roberts
GTA Civils Ltd
Gloucester House
66a Church Walk
Burgess Hill
West Sussex
RH15 9AS

Your ref

Our ref
DS_CC_PDE-117055

Date
15 May 2020

Contact

Tel 0330 303 0119

Dear Mr Roberts,

Site: 53 and 55 Southview Road, Southwick, Brighton, West Sussex, BN42 4TS.

We have completed the capacity check for the above development site and the results are as follows:

Surface Water

Following initial investigations, there is currently adequate capacity in the local surface network to accommodate a surface water flow of **2 l/s** for the above development at manhole reference TQ2405**2850**. Any excess surface water flows should be disposed of by an alternative means i.e. Soakaways, or any local drainage watercourses, subject to all interested parties' approval.

It should be noted that although the above assessment indicates that there is capacity available for your proposed surface water flows the LLFA (Local Lead Flood Authority) may impose/request that a lower flow is discharged to the public surface water sewer.

If the excess surface water flows are to be attenuated on site, it could have a significant effect on any proposed Section 104 Agreements. Any attenuation proposals should be agreed before any works are implemented on site. Where capacity is limited/restricted, agreement should be sought if you are to include any highway drainage within your proposals as Southern Water is not obligated to accept highway flows.

It should be noted that this information is only a hydraulic assessment of the existing sewerage network and does not grant approval for a connection to the public sewerage system. A formal S106 connection application is required to be completed and approved by Southern Water Services. Please see the link below:

southernwater.co.uk/ConnectiontoPublicSewer/ApplicationForm

Southern Water Services Ltd, Registered Office: Southern House, Yeoman Road, Worthing West Sussex BN13 3NX Registered in England No. 2366670

Should you require any further information, please contact us at the above-mentioned phone number or address shown in the footer.

Yours sincerely,



Joff Edevane
Growth Planning Lead
Business Channels

Please note: - The information provided above does not grant approval for any designs/drawings submitted for the capacity analysis. The results quoted above are only valid for 12 months from the date of issue of this letter.

Southern Water Services Ltd, Registered Office: Southern House, Yeoman Road, Worthing West Sussex BN13 3NX Registered in England No. 2366670



Civil Engineering - Transport Planning - Flood Risk

GTA Civils & Transport, Gloucester House, 66a Church Walk, Burgess Hill, West Sussex, RH15 9AS
T: 01444 871444 F: 01444 871401 E: enquiries@gtacivils.co.uk www: gtacivils.co.uk

GTA Civils & Transport Limited, Registered in England No. 11917461. VAT Registration No. 319 2609 02