This Design is copyright and is strictly private and confidential. It is the exclusive property of ENCON AIR SYSTEMS LIMITED. It must not be used, copied or exhibited without their full written permission.

DO NOT SCALE. IF IN DOUBT–ASK

A4

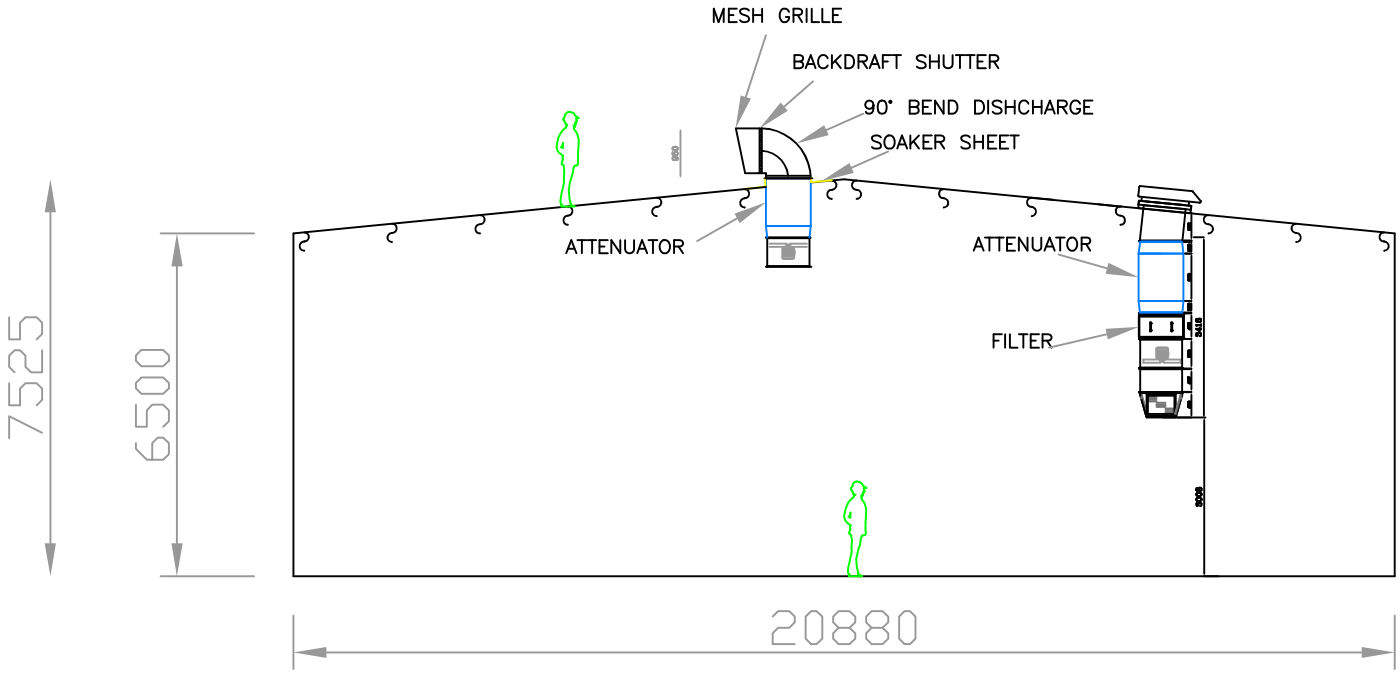

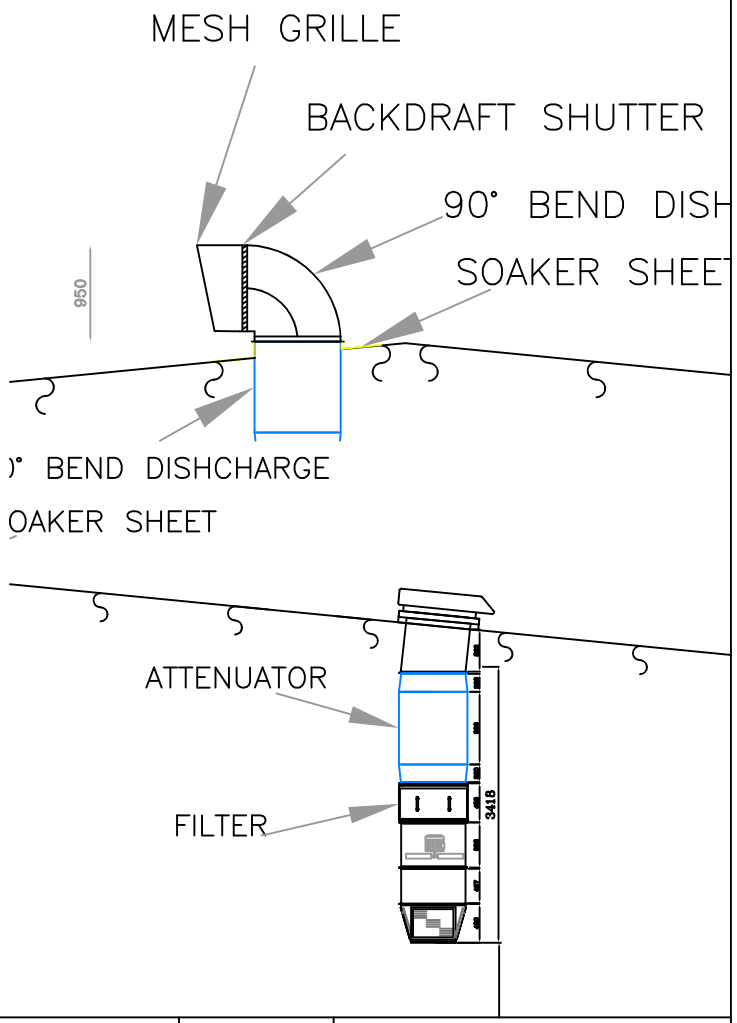

SCHEMATIC DIAGRAM ONLY.

CUSTOMER APPROVAL

NAME _____

SIGNED _____

DATE _____

COMPANY _____

Revision	
Drawn By:	Approved By:
Drawing No.	Scale:
Enquiry No.	Date:

encon AIR SYSTEMS LIMITED

31 Quarry Park Close
Charter Gate
Moulton Park Industrial Estate
Northampton
NN3 6QB

TEL: (01604) 494187
FAX: (01604) 645848
Website: www.encon–air.co.uk
e–mail: CAD@encon–air.co.uk

Title:

Site: