SS300110

SILT SENTINEL™



SuDSTAINABILTY©

DRAINAGE PRODUCTS THAT ARE DESIGNED FOR LONGEVITY

turtle enviro™

PDS/SS300110/5/20/V2



SS300110

For the catchment and removal of silt and debris from roofs and hard standing areas, before entering the surface water drainage system. The Silt Sentinel 300110 model is ideal for installation upstream of smaller volume, cellular/crate - attenuation systems, significantly improving the water quality going into the system, and thus supporting the longevity and sustainability of the system.

This model is designed for use in drainage systems within the curtiledge of a property and not for use in the road or highway. All units are supplied with circular, 35KN loading access cover, which will take a light traffic loading, such as domestic driveways and gardens, but not in areas that will potentially experience traffic that is over 2.5 tonnes.

For trafficked, heavy duty and installations deeper than 1100mm. Please refer to our Model : 300110HD

As detailed opposite, there are four units available, each offering a different invert depth. All models have same base unit, which features an integral filter basket, which has an alloy filter cassette fitted inside, this filter cassette gives increased separation of silt and removal of any debris that enters the unit from the upstream drainage system. As all the flow has to pass through the filter to discharge from the unit the solids and debris are retained in the basket. The filter basket also features a stainless steel handle, which is ergonomically designed to aid lifting.



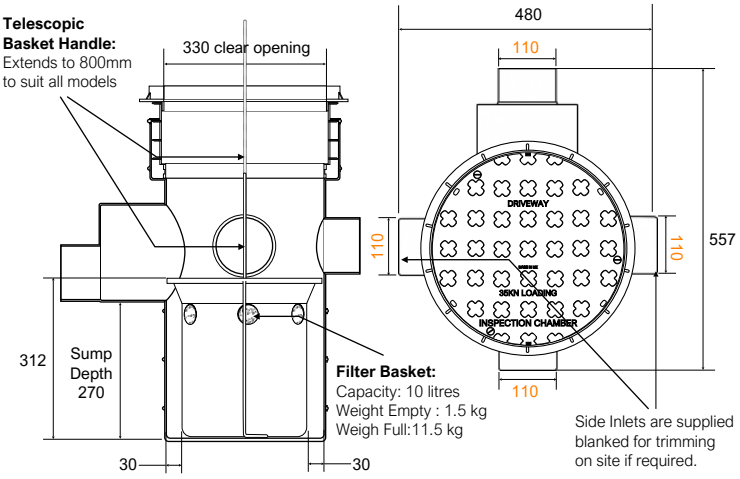

Base Unit Material	PE&PP
Basket Material	PE >stainless steel> alloy filter

MODEL:SS300110



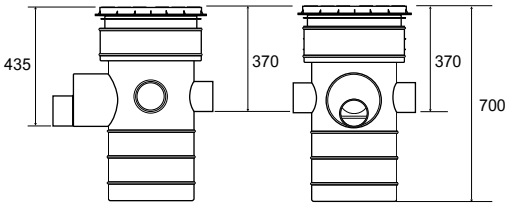

Approx Weight (kg)	**10**
Pallet Qty	17

MODEL:SS300110ER1



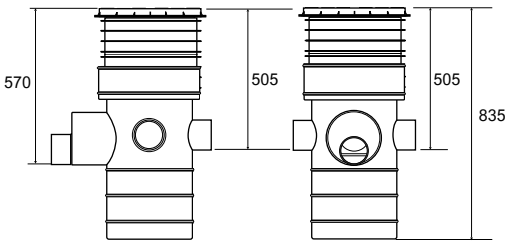

Approx Weight (kg)	**10.5**
Pallet Qty	14

MODEL:SS300110ER2



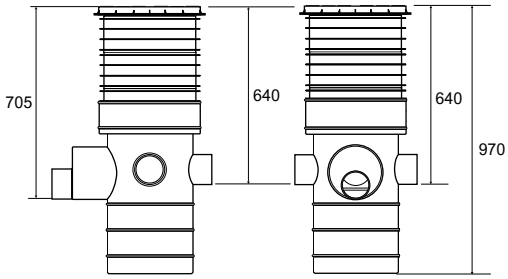

Approx Weight (kg)	**11**
Pallet Qty	12

MODEL:SS300110ER3



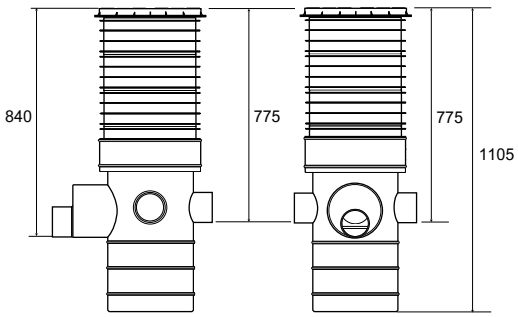

Approx Weight (kg)	**11.5**
Pallet Qty	12

Please Note:All Dimensions shown are in millimetres

SuDSTAINABILTY©

DRAINAGE PRODUCTS THAT ARE DESIGNED FOR LONGEVITY

www.turtleenviro.co.uk | Email: sales@turtleenviro.co.uk | Sales & Technical support: Tel. 0191 3036315